版本 REV.MARK	变更内容 REVISION RECORD	签名 SIGNARURE	日期 DATE

接线表

端子		X1 电源					X4 I/O												X2 IN					X3 OUT				
位号		1	2	3	4	5	1	2	3	4	5	6	7	8	9	10	11	12	1	2	3	4	外壳	1	2	3	4	外壳
信号	CANopen	L	RES-	RES+	N	PE	DO1+	DO_COM	AI1	AGND	BAT_PWR	GND	STO_FB-/DI1+	STO_FB+/DI1-	NC/DI2+	STO_COM/DI2-	STO2/DI3+	STO1/DI3-	GND	CAN_L	CAN_H	GND	PE	GND	CAN_L	CAN_H	GND	PE
	EtherCAT	L	RES-	RES+	N	PE	DO1+	DO_COM	AI1	AGND	BAT_PWR	GND	STO_FB-/DI1+	STO_FB+/DI1-	NC/DI2+	STO_COM/DI2-	STO2/DI3+	STO1/DI3-	TX+	RX+	RX-	TX-	PE	TX+	RX+	RX-	TX-	PE
	RS485	L	RES-	RES+	N	PE	DO1+	DO_COM	AI1	AGND	BAT_PWR	GND	STO_FB-/DI1+	STO_FB+/DI1-	NC/DI2+	STO_COM/DI2-	STO2/DI3+	STO1/DI3-	GND	RS485+	RS485-	GND	PE	GND	RS485+	RS485-	GND	PE

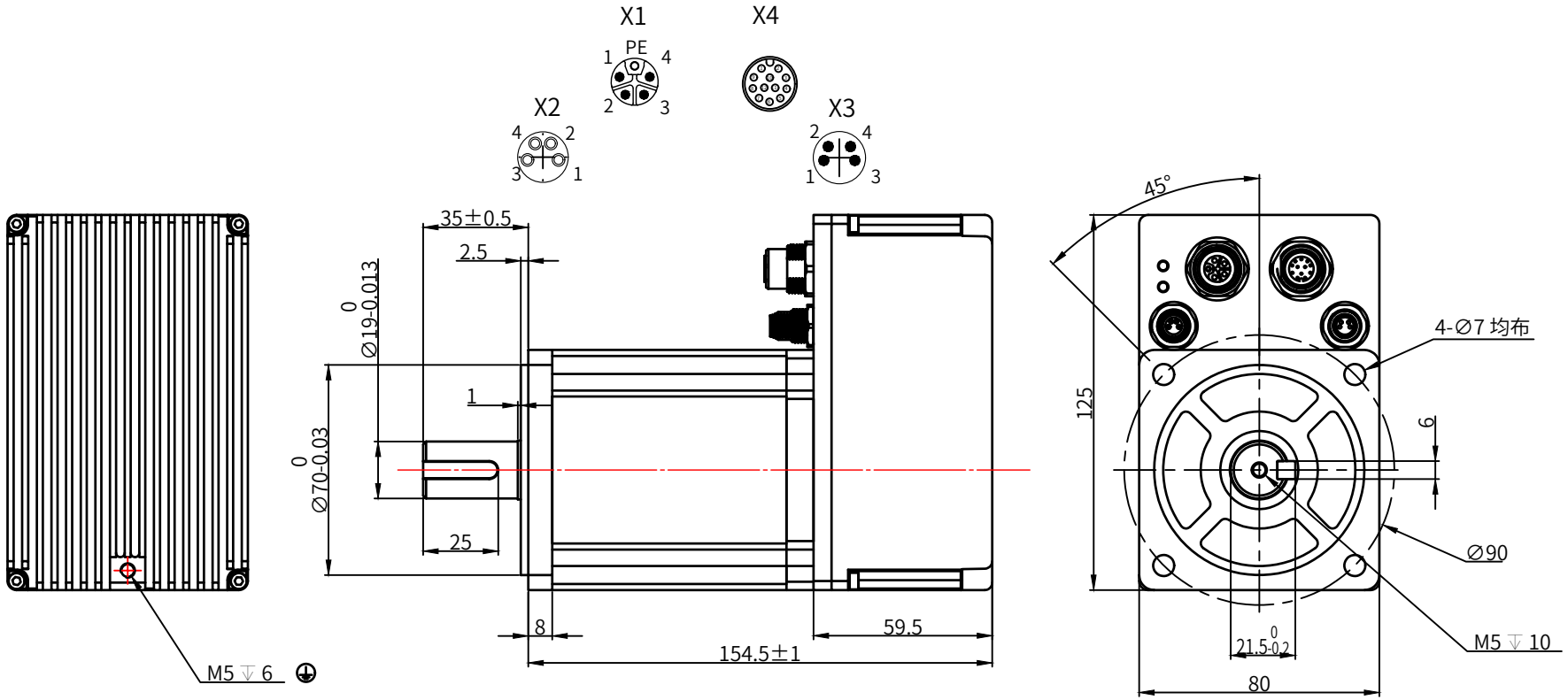

	PAMB8063-XXX-0HE
额定功率/Rated Power	630W
额定电压/Rated Voltage	220VAC
额定电流/Rated Current	3.65A±10%
额定力矩/Rated Torque	4Nm
额定转速/Rated Speed	1500rpm
峰值力矩/Peak Torque	4.8Nm
运行方式/Operation Mode	PP/PV/PT/CSP/Home
转子惯量/Rator Inertia	$1.07*10^{-4}$Kg.m^2
重量/Weight	3.12kg
工作环境温度/Working Temperature	0-40°C
工作环境湿度/Environment Humidity	10%RH-85%RH无凝结
防护等级/ Ingress Protection Rating	IP54

未注尺寸公差 DEFAULT DIMENSIONAL TOLERANCE GB/T 1804-M	未注形位公差 DEFAULT GEOMETRIC TOLERANCE GB/T 1184-K	FIRST ANGLE METHOD	NiMotion 北京立迈胜控制技术有限公司 Beijing Nimotion Control Technology Co.,Ltd.						
设计DRAWN	耿源	2025/6/24	图号 DWG NO.	LMS-C20-25122			型号 MODEL	PAMB8063-XXX-0HE	
审核CHK'D	任君	2025/6/24	物料编码 P/N				名称 TITLE	一体化中压伺服电机	
批准APPV'D	董春禄	2025/6/24	版本 REV	A	图幅 SIZE	A4	比例 SCALE	1:2	共 1 张 第 1 张 SHEET 1 OF 1