PMMP Series EtherCAT&CANopen&RS485 Communication

Integrated Servo Motor Instruction Manual

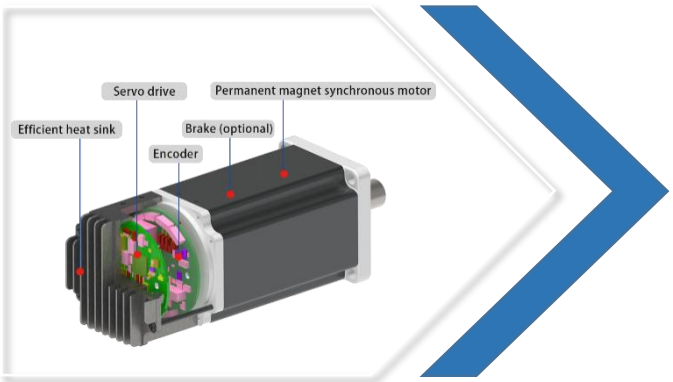

Beijing NiMotion Control Technology Co., Ltd

Safety Instructions

Danger (May cause death or serious injury!)	
Wiring job, be sure to by professional electrical engineer according to the connection diagram installation operation.	Danger of electric shock and fire.
Before wiring , make sure that the power supply is off.	Danger of electric shock and fire.
The ground wire of the motor and the input terminal of the power must be firmly installed.	Danger of electric shock and fire.
Do not bend , pull or clamp the connecting cable forcibly.	Danger of fire.
When using on the lifting device , please take measures to protect the position of the movable part.	Danger of injury.
Please set up circuit breakers and other safety devices to prevent external circuit short circuit and equipment failure can cut off the power supply in time.	Danger of electric shock and fire.
Do not use it in places with severe vibration and impact.	Danger of fire.
After the driver is powered off, the bus voltage will remain for a period of time. Do not touch the power input terminal within two minutes.	Danger of electric shock and fire.
For the power supply of the motor, please use the primary and secondary reinforced insulated DC power supply.	Danger of electric shock.
Please cut off the power supply of the motor during power failure, otherwise the motor will start suddenly after restoring the power supply.	Danger of injury.
When the motor is running, please ensure safety before releasing the holding force of the motor.	Danger of injury.
Do not use the motor near inflammable, explosive, corrosive environment and places easy to touch water.	Danger of electric shock and fire.
Warning (May result in injury or damage to objects!)	
When using the motor, do not exceed its specification value.	Danger of injury and motor fault.
Do not hold the motor output shaft or cable during handling.	Danger of injury and motor fault.
Please install the protective cover on the rotating part (output shaft) of the motor.	Danger of injury.
Do not stack obstacles hindering ventilation around the motor to ensure heat dissipation.	Danger of motor fault.
Do not touch the motor when it is running or within a short time after it stops running. Please post a warning sign in a conspicuous position.	Danger of scalding.
Please use the motor according to the specified parameters.	Danger of motor fault and fire.
Please install an emergency stop device or emergency stop circuit outside the motor to ensure safe shutdown in case of failure or abnormal operation.	Danger of injury.
Please do not touch the shell during insulation resistance measurement or insulation withstand voltage test.	Danger of electric shock.
When the motor is abnormal, please stop running immediately and cut off the power supply to avoid fire or injury.	Danger of injury and fire.
When using, ensure that the grounding resistance of the system is less than 4Ω. When multiple motors are used in parallel, the grounding resistance between the ground of each	Danger of motor fault.

Nimotion, inc. All rights reserved.

motor is less than or equal to 0.1Ω. The interface of the master controller and the slave station of the integrated servo motor should be in common ground, and the grounding resistance should be less than or equal to 0.1Ω. The motor shell shall be installed on the motor bracket through the installation hole. The bracket shall be reliably connected to the ground, and the grounding resistance shall be less than or equal to 0.1Ω.	
Caution	
Do not disassemble or modify the motor, otherwise it may cause injury. For inspection or repair, please contact Beijing NiMotion Control Technology Co., Ltd.	
When the motor is scrapped, please disassemble it as far as possible and treat it as industrial waste.	
Before use, please read and fully understand the "Safety Instructions" to use the motor correctly.	
This product is designed and manufactured for use in general industrial equipment. Don’t use it for any other purpose. We hereby state that we will not be liable for any damages caused by ignoring this advice.	

Nimotion, inc. All rights reserved.

1. Summary

1.1 Preface

Thank you for using PMMP series integrated servo motor products of Beijing NiMotion Control Technology Co., Ltd! Please read this manual carefully before using!

PMMP series integrated low-voltage servo motor is a new waterproof servo product independently developed by our company. This product is based on the highly compact integrated development concept, which integrates permanent magnet synchronous motor, single-turn absolute value encoder, bus servo driver, digital volume I/O in one. The product adopts FOC magnetic field oriented control technology and SVPWM technology, and supports EtherCAT or RS485 or CANopen bus control, has the characteristics of small size, simple connection. We hope that our products can help you achieve the desired motion control with superior performance, excellent quality and outstanding cost performance.

As our company is committed to the continuous iterative improvement of integrated motors, so the information provided by the company should be changed, please refer to the latest version without prior notice.

1.2 About Manuals and Acquire

- Unauthorized reprinting or copying of all or part of the contents of this manual is prohibited.
- Please understand that the performance, specifications, and appearance of the product may be changed without prior notice due to improvements.
- We strive to make the content of this manual as correct as possible. If you find any problems or errors or omissions, please contact NiMotion Inc.
- This manual is not shipped with the product. To obtain the electronic PDF file, you can obtain it in the following ways:
  - Log in to the official website of NiMotion Inc. https://www.nimotion.com ,"Member Center - Data download", log in to search keywords and download.
  - Scan the QR code on the product to obtain product related information.

Nimotion, inc. All rights reserved.

Contents

Safety Instructions I
1. Summary III
1.1 Preface III
1.2 About Manuals and Acquire III
2. Product Inspection and Model Description 1
2.1 Unpacking Inspection 1
2.2 Product Model Comparison.....1
2.2.1 Naming Rules for Product Model 1
2.2.2 Installation Dimension of Motor.....1
2.3 Motor Torque Curve 5
3. Specifications.....8
3.1 Technical Specifications 8
3.2 Indicator.....11
3.3 Definition of Terminal 13
3.3.1 Power Port..... 13
3.3.2 EtherCAT/CANopen/RS485 Communication Port 15
3.3.3 Input and Output 16
3.3.4 Wiring Diagram of Communication 18
3.3.5 Wiring Diagram of I/O..... 19
4. Install and Connect..... 26
4.1 Installation Precautions..... 26
4.1.1 Installation Places 26
4.1.2 Installation Requirements..... 26
4.1.3 Installation Cautions 26
4.2 Cable Wiring Requirement..... 27
4.2.1 Wiring Requirements..... 27
4.2.2 Grounding Requirements 27
4.3 Communication Distance 29
4.3.1 RS485 Communication 29
4.3.2 CAN Communication 30
4.3.3 EtherCAT Communication 30
4.4 Cable Wiring..... 31
4.4.1 Wiring Diagram of Communication 31
4.4.2 Debugging Wiring 32
4.4.3 External Control Wiring..... 32
4.4.4 Communication Networking Wiring..... 34
4.4.5 Network wiring requirements 34
5. Product Selection 36
5.1 Cable Selection 36

Nimotion, inc. All rights reserved.

5.2 Brake Resistance 41
6. Alarm Function 44
7. Daily Inspection and Maintenance 46
Version Change Record 47

Nimotion, inc. All rights reserved.

2. Product Inspection and Model Description

2.1 Unpacking Inspection

Please check the following items when unpacking:

- Whether it is the ordered product: Please check that the model and specification on the nameplate of the motor is the same as your order.
- Whether the product is damaged: Visually inspect the appearance for damage or scratches.
- Whether the screws are loose: Whether any screws are not locked or fall off.
- Motor without brake check whether the shaft is running smoothly: Rotate the motor shaft by hand, if it can run smoothly, it means that the motor shaft is normal.
- Motor with brake check whether the brake is normal: If the motor shaft is locked, the brake is normal.
- In case of any of the above situations, please contact us for proper solution.

Complete operational product components shall be included as follows:

- Integrated waterproof servo motor.
- Communication cable required.
- Communication interface components required.

2.2 Product Model Comparison

2.2.1 Naming Rules for Product Model

PMM P B 60 XX X B-COE - 0 H E B

① ② ③ ④ ⑤ ⑥ ⑦ ⑧ ⑨ ⑩ ⑪ ⑫

① PMM: Integrated Servo Motor	② Ingress Protection: Default-IP54、P-IP65
③ Rated speed: Default-3000,B-1500	④ Width of motor base: 40-40mm,60-60mm,80-80mm
⑤ Rated power: 10-100W,20-200W,40-400W, 75-750W	⑥ Inertia: Default-Medium inertia, L-Low inertia, H-High inertia
⑦ Performance of encoder: B-2500 lines or 17-bit absolute encoder, D-17-bit absolute muti-turn encoder	
⑧ Communication mode: COE-EtherCAT, CANopen-CANopen, 485-RS485	⑨ Length of shaft: 0-Standard length; 1-Non standard length
⑩ Shaft key form: S-Light shaft; F-Milling flat; K-Half circle key; H-Flat key; M-Perforated installation	
⑪ Special processing code: S-No special processing; A-Gear; B-Screw; E-Center thread hole	
⑫ Brake: Default-Without break; B-With break	

Figure1 Naming Rules for PMMP Series

Note: The encoder of PMMP40 series is 17-bits,but the EtherCAT communication. The encoder of PMMP60&80 series is 2500 lines.

2.2.2 Installation Dimension of Motor

Nimotion, inc. All rights reserved.

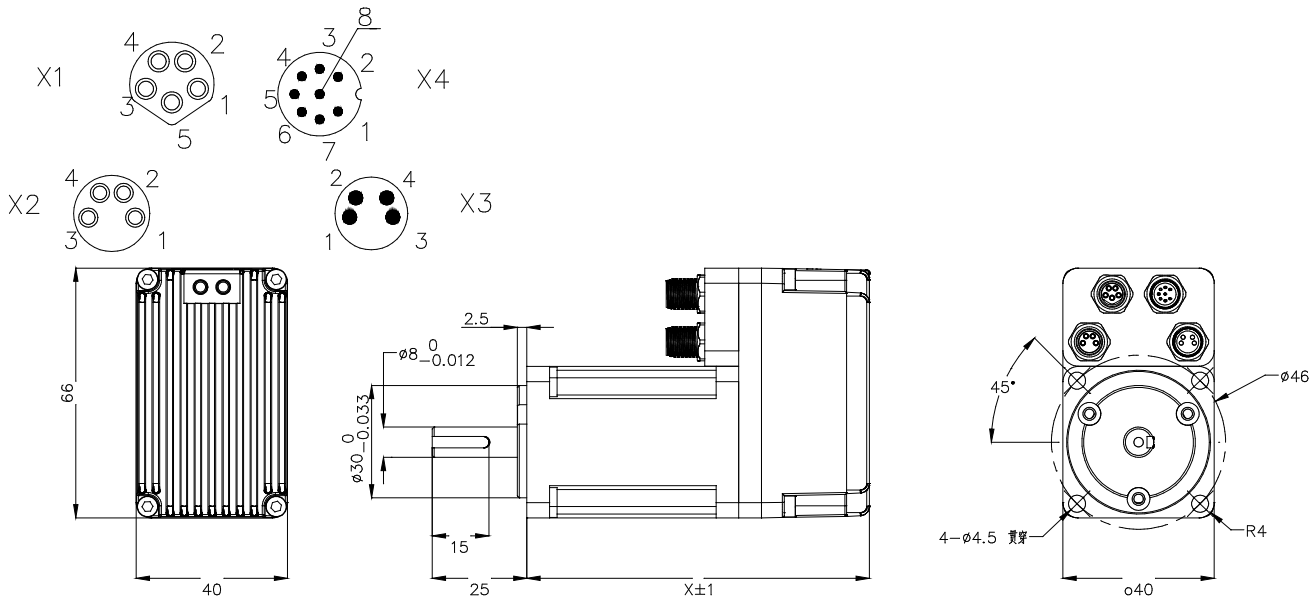

Figure2 Structure Diagram of PMMP40 Series Motor

Table1 Motor Model and Some Key Dimensions

Model	Length (X in Figure)(mm)	Diameter of shaft	With or without brake	Holding torque of brake(N·m)	Rotor inertia (kg·m²)
PMMP4010B-COE/CANopen/485-0HE-D03	101.5	Φ8	No	-	$3.9*10^{-6}$
PMMP4010B-COE/CANopen/485-0HE-D04	101.5	Φ8	No	-	$3.9*10^{-6}$
PMMP4010B-COE/CANopen/485-0HEB-D03	141.5	Φ8	Yes	≥0.3	$4.08*10^{-6}$
PMMP4010B-COE/CANopen/485-0HEB-D04	141.5	Φ8	Yes	≥0.3	$4.08*10^{-6}$
PMMP4010D-COE/CANopen/485-0HE-D03	101.5	Φ8	No	-	$3.9*10^{-6}$
PMMP4010D-COE/CANopen/485-0HE-D04	101.5	Φ8	No	-	$3.9*10^{-6}$
PMMP4010D-COE/CANopen/485-0HEB-D03	141.5	Φ8	Yes	≥0.3	$4.08*10^{-6}$
PMMP4010D-COE/CANopen/485-0HEB-D04	141.5	Φ8	Yes	≥0.3	$4.08*10^{-6}$

Nimotion, inc. All rights reserved.

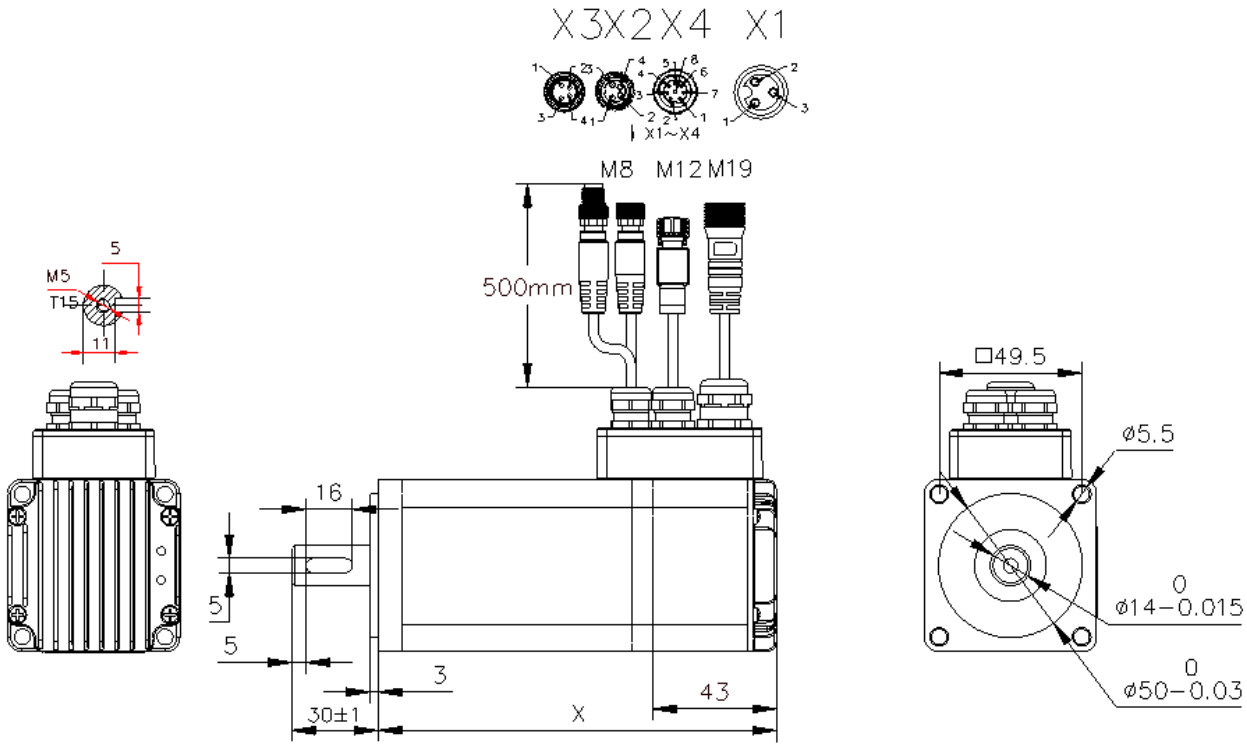

Figure3 Structure Diagram of PMMP60 Series Motor

Table2 Motor Model and Some Key Dimensions

Model	Length (X in Figure)(mm)	Diameter of shaft	With or without brake	Rotor inertia (kg·m²)
PMMP6020B-COE/CANopen/485-X	115	Φ14	No	$2.4*10^{-5}$
PMMP6040B-COE/CANopen/485-X	145	Φ14	No	$3.0*10^{-5}$

Nimotion, inc. All rights reserved.

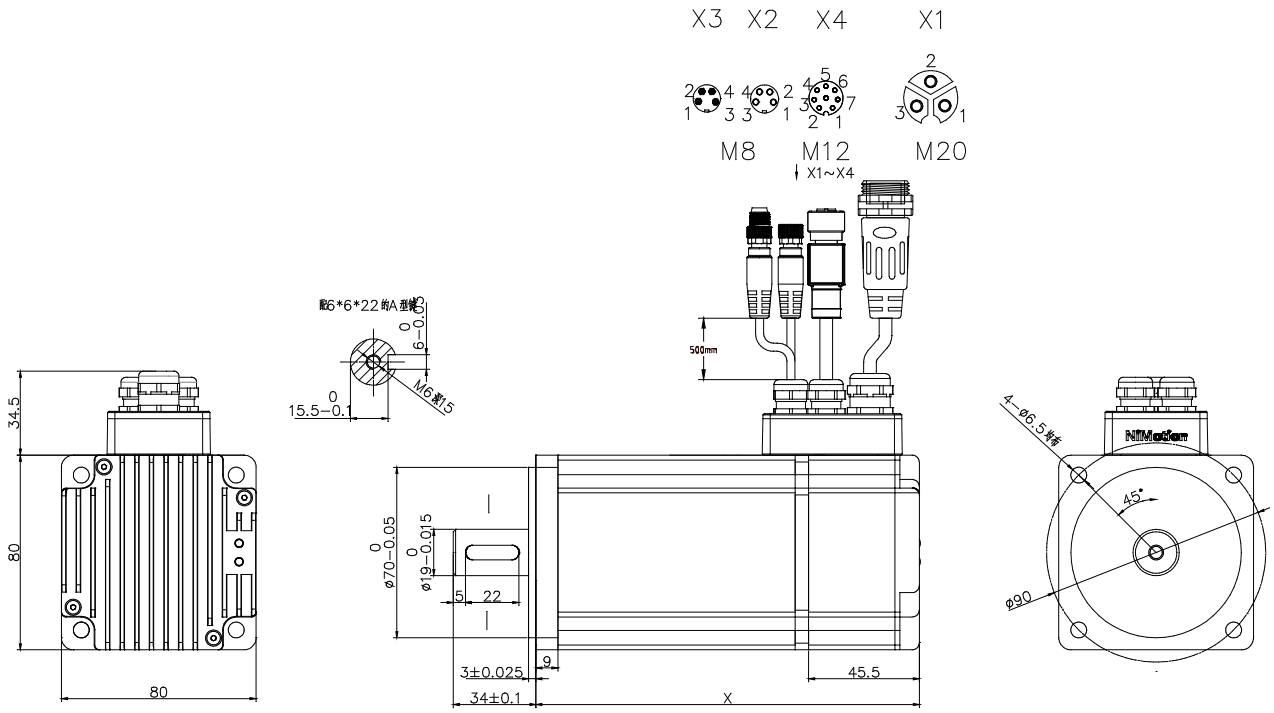

Figure4 Structure Diagram of PMMP80 Series Motor

Table3 Motor Model and Some Key Dimensions

Model	Length(X in Figure)(mm)	Diameter of shaft	With or without brake	Rotor inertia (kg·m²)
PMMP8075B-COE/CANopen/485-X	157.5	Φ19	No	$1.2*10^{-4}$

Nimotion, inc. All rights reserved.

2.3 Motor Torque Curve

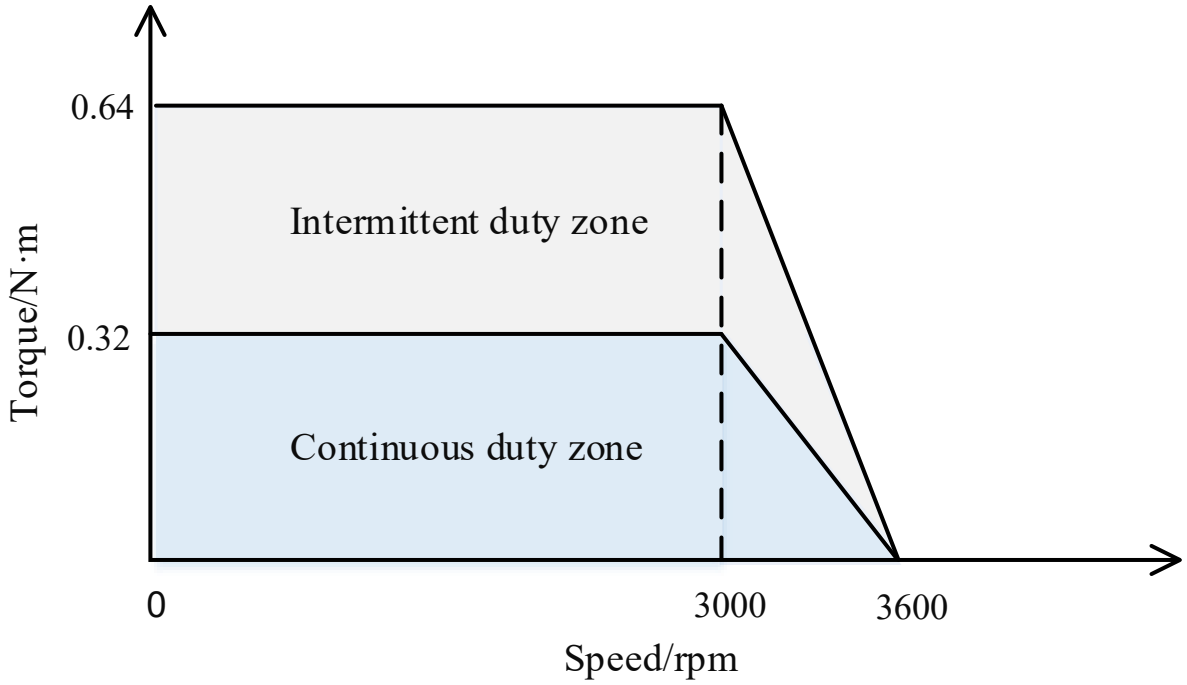

Figure5 PMMP4010B-COE/CANopen485-D03-X Frequency-Torque Characteristics(@48V, 3.2A)

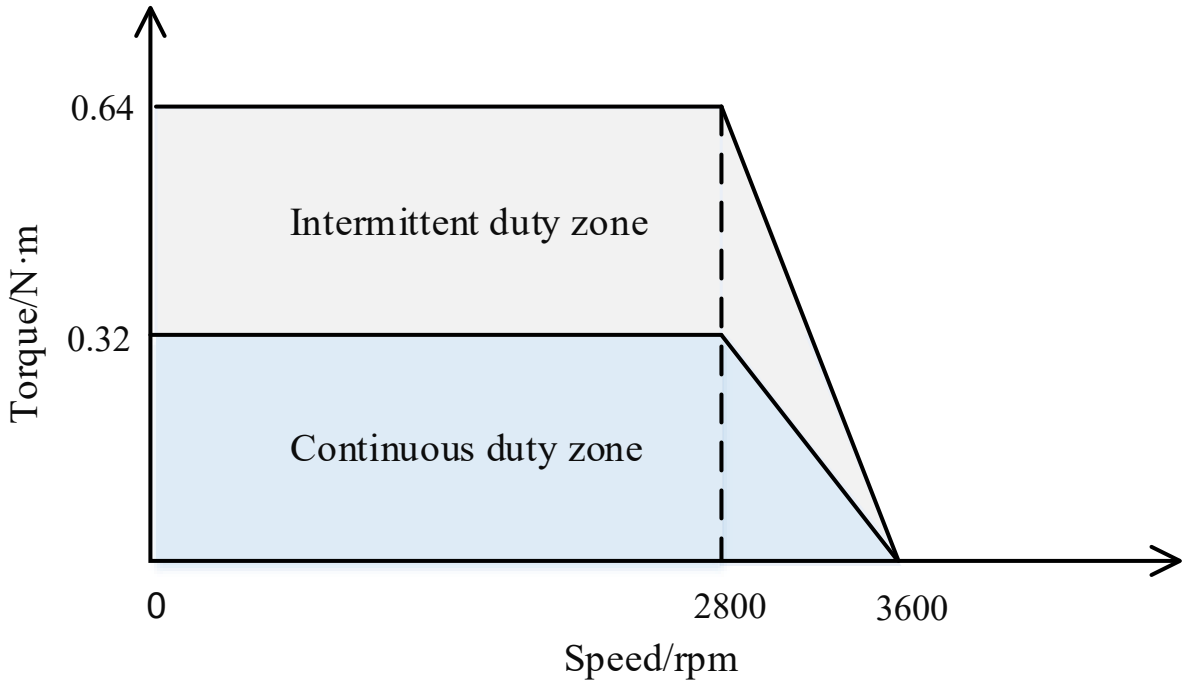

Figure6 PMMP4010B-COE/CANopen485-D04-X Frequency-Torque Characteristics(@24V, 5.98A)

Nimotion, inc. All rights reserved.

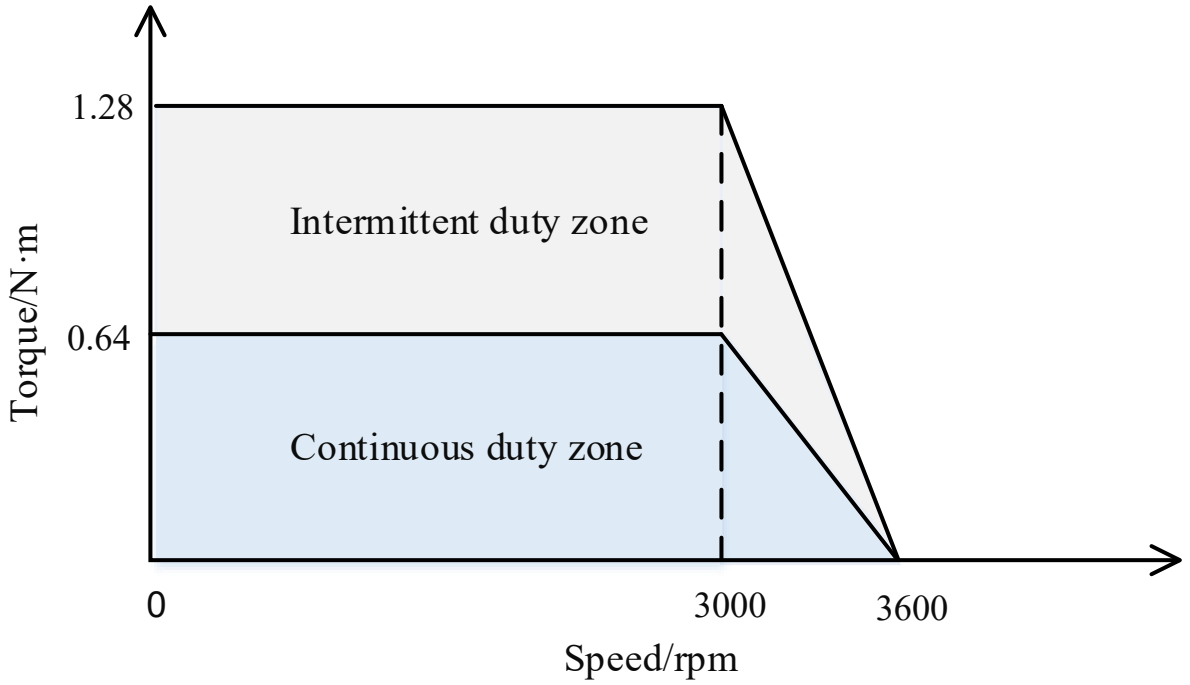

Figure7 PMMP6020B-COE/CANopen/485-X Frequency-Torque Characteristics(@48V, 8.5A)

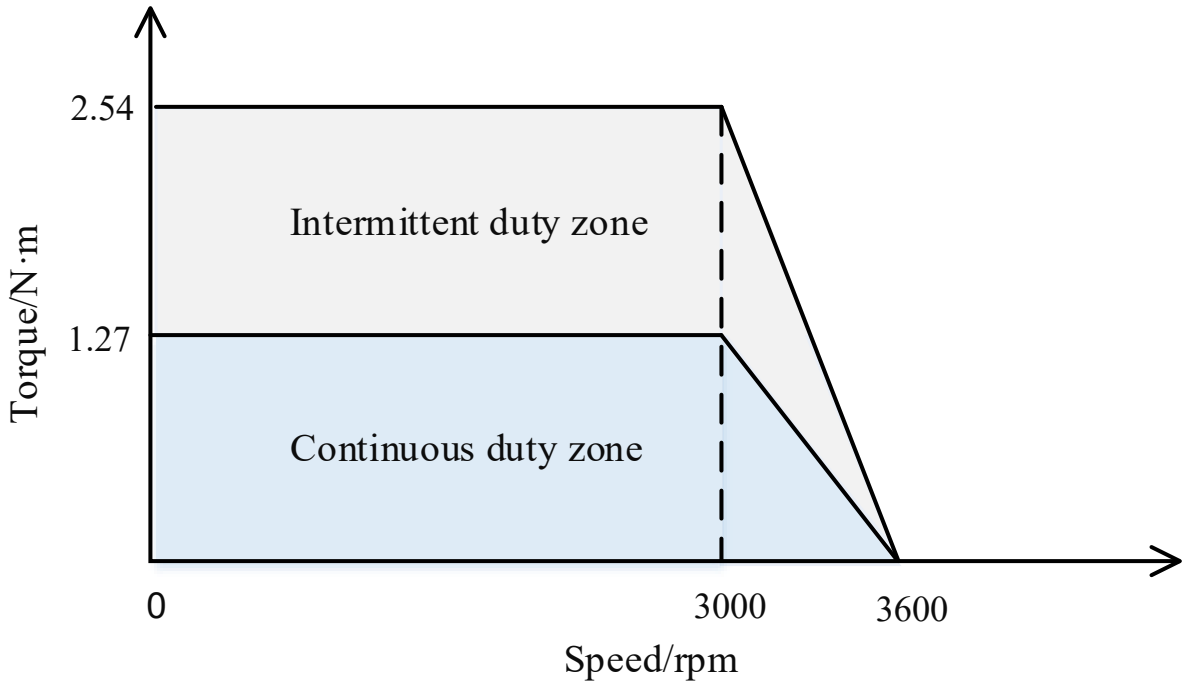

Figure8 PMMP6040B-COE/CANopen/485-X Frequency-Torque Characteristics(@48V, 13A)

Nimotion, inc. All rights reserved.

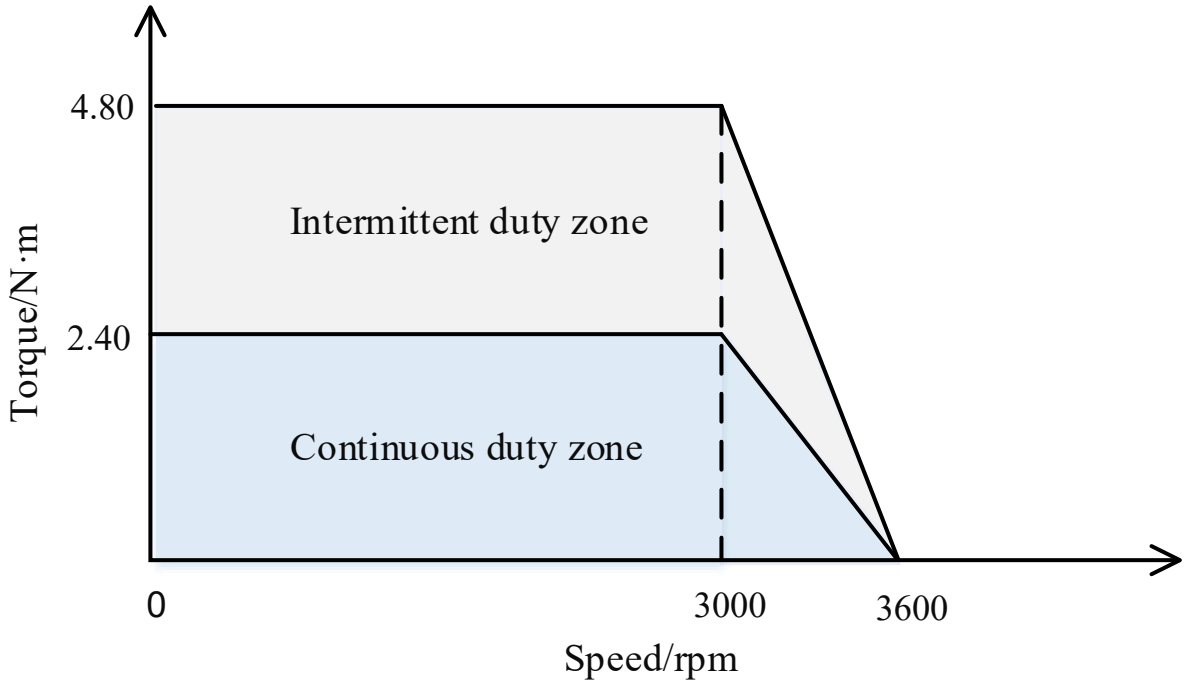

Figure9 PMMP8075B-COE/CANopen/485-X Frequency-Torque Characteristics(@48V, 18A)

Note: Do not use the motor for more than 10s in the intermittent duty zone.

Nimotion, inc. All rights reserved.

3. Specifications

3.1 Technical Specifications

Table4 Motor Technical Specification

Model		PMMP4010B-X-D04-X	PMMP4010B-X-D03-X	PMMP6020B-X	PMMP6040B-X	PMMP8075B-X
The range of input power supply voltage(VDC)		16~52				
Rated voltage (VDC)		24	48			
Rated speed (rpm)		3000				
Protective characteristic		IP65				
Rated current (A)		5.98	3.2	8.5	13	18
Rated torque (N·m)		0.32	0.32	0.64	1.27	2.4
Rated power (W)		100		200	400	750
Working Environment	Temperature(°C)	0~40				
	Humidity (RH)	10%~85%, No condensation				
	Altitude (m)	<1000				
	Installation environment	No corrosive gas, inflammable material, oil mist, etc., and no strong vibration				
	Installation method	Horizontal or vertical				
Driver method		FOC magnetic field oriented control technology and SVPWM				
Single-turn Encoder		17-bit or 2500 lines encoder				
Multi-turn encoder	Encoder type	17-bit absolute multi-turn encoder				
	Multi-turn position range	-2147483648~2147483647				
	Power consumption in standby mode	3uA				
	Battery capacity, specifications	2600mAh，Rated voltage 3.6V				
	Battery connection Method	External connection				
Brake	Internal	32W		25W		35W

Nimotion, inc. All rights reserved.

resistance	External	· It is configured through pin 1 of power line X1, and external and internal brake resistances can't be used in parallel.	· It is configured through pin 3 of power line X1, and external and internal brake resistances can't be used in parallel. · It can be connected to the brake and can't be used together with the external brake resistor function. Note: The positive pole of the brake is connected to the positive pole of 24V power supply, and the negative pole of the brake is connected to the brake resistance wire. At the same time, the H2004-05 function number is set to 30, which is valid at low level.
Control signals	DI (Digital input)	· Quantity: 3 · Bidirectional optocoupler isolation · Can connect external DC power supply: 12~24V Configurable functions: · Used as a switch · Used as pulse input channel	· Quantity:3 · No isolation · Configure pull-up by setting the object 2003_h: 15_h · 3~30V at high level, 0~0.5V at low level Configurable functions: · Used as a switch · Used as pulse input channel
	DO/DX (DX Can configures as digital input or digital output)	· Quantity:1 · Maximum load current: 2A · Configurable functions: 1. Ordinary digital output; 2. Motor running and stopping; 3. Arrival of target; 4. Alarm output; (When the motor state meets the above conditions, the DO switch state changes.) Note: Can not be configured as DI, for motor with brake, no DO function	· Quantity:1 · Configures as DO or DI: Maximum load current: 8mA · Configurable functions: 1. Ordinary digital output; 2. Motor running and stopping; 3. Arrival of target; 4. Alarm output; (When the motor state meets the above conditions, the DO switch state changes.)

Nimotion, inc. All rights reserved.

	AI (Analog input)	· Quantity: 1 · Input method: Single-ended input; · Type of signal: Voltage; · Resolution ratio: 12bit · Voltage: 0-10V · Precision: Quoted error≤1% · Configurable functions: Dead band, Filter, Bias, Rate, Direction
Communication protocol		EtherCAT, CANopen, Modbus RTU(RS485)
Transmission Rate		· EtherCAT:100Mbps · CANopen: 1Mbps,800kbps,500kbps,250kbps,125kbps,100kbps,50kbps, 20kbps,10kbps; The default is 1Mbps. · Modbus RTU(RS485): 1Mbps,500kbps,256kbps,115.2kbps, 57.6kbps, 38.4 kbps,19.2kbps,9.6kbps; The default is 115.2kbps.
Control mode	CiA402	· Profile position mode (PP), Profile velocity mode(PV), Profile torque mode(PT), Velocity mode(VM). · Interpolated position mode(IP) · Homing mode(HM) (Switch to find the origin, Finding the origin by blocking rotation) · Cyclic synchronous position mode(CSP), Cyclic synchronous velocity mode(CSV), Cyclic synchronous torque mode(CST).
	NiMotion	· Position mode: pulse control, multi-segment position control, digital quantity setting control. · Velocity mode: multi-segment velocity control, digital quantity setting control. · Torque mode: digital quantity setting control.
Features	Fault diagnosis	Overvoltage/Undervoltage/Overtemperature/Hardware failure /Stall/Overload/Overspeed/Initialization failure /Storage failure/Over limit detection/Homing timeout/Track failure/Target position overflow fault, etc.
	Fault reset	The alarm is self reset, and the fault is manual reset.
	Software position limit	The position range is set by the software, and the motor lock shaft is out of the range and the alarm is raised.
	Identification of parameters	It has the function of parameter identification and PI parameter self-tuning.

Nimotion, inc. All rights reserved.

	Recovery of position	It can be configured for single-turn position value recovery or multi-turn absolute position value recovery. · Single-turn position value recovery: After the drive is powered off, the integrated motor moves the single-turn position and recovers the absolute position after being powered on again. · Multi-turn absolute position value recovery: the encoder backs up data through the battery when the drive is powered off, the integrated motor moves to any position, and the drive calculates the absolute position of the machine through the absolute position of the encoder after power-on, without repeating the mechanical origin restoration operation.
	Gain switching	Two groups of gain parameters can be preset, and the two groups of gain can be switched automatically according to different motor operating states.
	Resonance suppression	Effectively suppress vibration frequency range is greater than or equal to 300Hz.
	Low frequency suppression	Effectively suppress vibration frequency range is less than or equal to 100Hz.
	Parameter save and restore	To save and restore the default parameters.
	Online upgrade	Update in time according to the actual needs of the product to improve maintainability and efficiency

3.2 Indicator

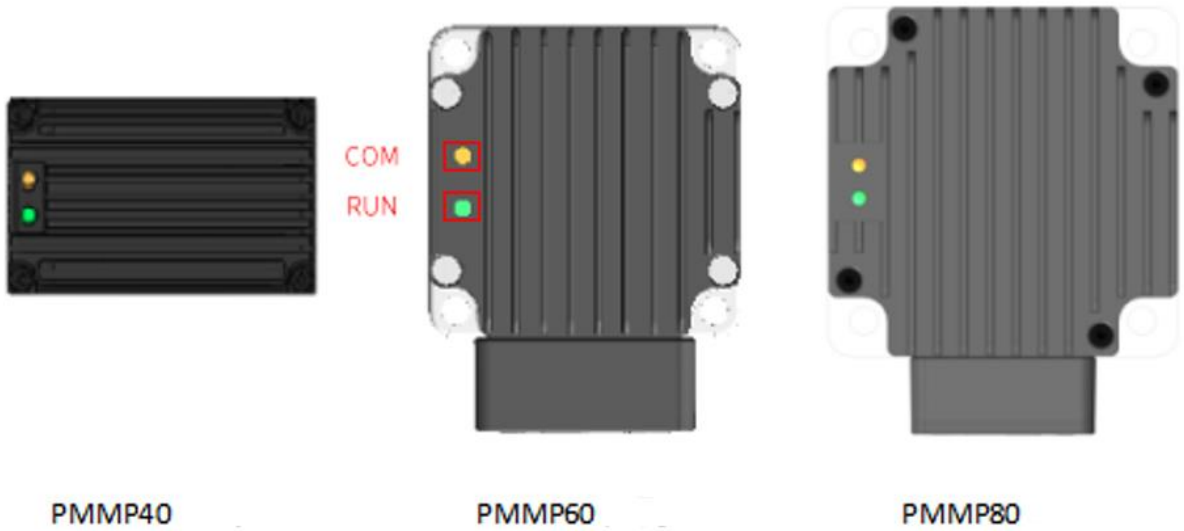

Figure10 Indicator

Nimotion, inc. All rights reserved.

Table5 Meaning of Indicator

Meaning	Green light (RUN)	Yellow light (COM)
Normal communication	Steady light	Light flashes slowly (1s flashing frequency)
Communication is normal, internal warnings are generated.	Steady light	Light flashes slowly (0.5s flashing frequency)
Communication is normal, internal faults occur.	Steady light	Light flashes slowly (0.25s flashing frequency)
Communication is normal, the hardware failure occurs.	Steady light	Light off
The power supply is abnormal or has a serious fault.	Light off	Light off

Nimotion, inc. All rights reserved.

3.3 Definition of Terminal

3.3.1 Power Port

PMMP40 Series

Power port is marked as X1.

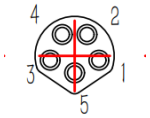

Figure11 PMMP40 Series Power Port

Table6 Definition of Power Ports

Model number	Pin	Function	Note
PMMP4010X-X-D03-X	1	VCC	16～52VDC, Two wires needs to connect power at the same time the positive
	2		
	3	GND	The two cables must be connected to the negative terminal of the power supply at the same time
	4		
	5	RES	Brake resistance
PMMP4010X-X-D04-X (Note: This type of integrated motor is limited in power supply voltage range of 28~52VDC.)	1	VCC	16～52VDC, Two wires needs to connect power at the same time the positive
	2		
	3	GND	The two cables must be connected to the negative terminal of the power supply at the same time
	4		
	5	RES	Brake resistance

PMMP60 Series

Power port is marked as X1.

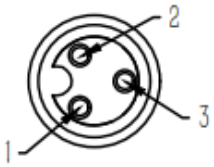

Figure12 PMMP60 Series Power Port

Table7 Definition of Power Ports

Pin	Function	colour	Note
1	VCC	Red	16~52VDC
2	GND	Black	-
3	RES	Brown/Blue	Brake resistance

Nimotion, inc. All rights reserved.

PMMP80 Series

Power port is marked as X1.

Figure13 PMMP80 Series Power Port

Table8 Definition of Power Ports

Pin	Function	colour	Note
1	VCC	Red	16~52VDC
2	RES	Brown/Blue	Brake resistance
3	GND	Black	-

Wiring diagram of braking resistor:

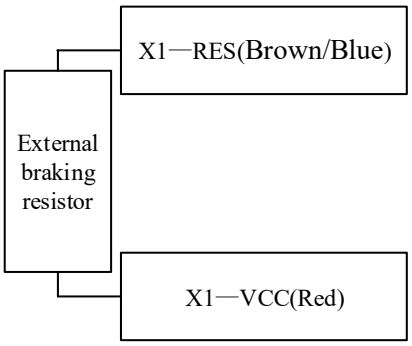

Figure14 Wiring Diagram of Braking Resistor

Note: The positive and negative poles of the power cord cannot be connected in reverse, otherwise the motor may be damaged. And the original manufacturer cannot provide warranty service for such damage.

Nimotion, inc. All rights reserved.

3.3.2 EtherCAT/CANopen/RS485 Communication Port

EtherCAT-IN/CAN-IN/RS485-IN is marked as X2, EtherCAT-OUT/CAN-OUT/RS485-OUT is marked as X3. The port are defined as follows.

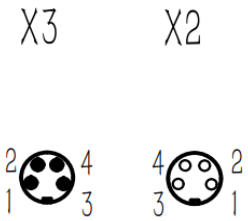

Figure15 Communication port

Tabled9 Definition of Communication Ports(Viewed from butt joint)

Wiring Table(EtherCAT)				Wiring Table(CAN)				Wiring Table(RS485)			
X2 EtherCAT IN		X3 EtherCAT OUT		X2 CAN IN		X3 CAN OUT		X2 RS485 IN		X3 RS485 OUT	
1	TX+	1	TX+	1	GND	1	GND	1	GND	1	GND
2	RX+	2	RX+	2	CANL	2	CANL	2	RS485+	2	RS485+
3	RX-	3	RX-	3	CANH	3	CANH	3	RS485-	3	RS485-
4	TX-	4	TX-	4	GND	4	GND	4	GND	4	GND
Shell	PE	Shell	PE	Shell	PE	Shell	PE	Shell	PE	Shell	PE

Nimotion, inc. All rights reserved.

3.3.3 Input and Output

PMMP40 Series

The I/O port is marked as X4. The port are defined as follows.

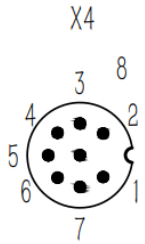

Figure16 I/O Port

Table10 Definition of I/O Ports

Pin	Meaning	Function
1	BAT_PER	Encoder external battery interface
2	DI1	· 12 ~ 24V common-anode/common-cathode signal system · Bidirectional optocoupler isolation · Input current 5mA
3	DI2	
4	DI3	
5	COM	Common-anode input common or common-cathode COM input common
6	GND	GND
7	AI	Analog input ranges from 0 to10V
8	DO1	· MOSFET open leakage output · Maximum current 2A, maximum voltage 52V (For the built-in brake motor, the DO can't be use.)

Nimotion, inc. All rights reserved.

PMMP60/PMMP80 Series

The I/O port is marked as X4. The I/O port defined as follows.

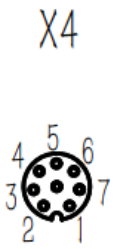

Figure17 I/O Port

Table11 Definition of I/O Ports

Pin	Meaning	Function
1	DI1	Configure pull-up by setting the object 2003_h: 15_h. The high level ranges from 3.0 to 30V, and the low level ranges from 0 to 0.5V. The DI input is connected to the sensor or switch in the following three cases: · NPN sensor(pull-up enabled):DI is connected to OUT, and GND is connected to 0V. · PNP sensor(pull-up canceled):DI is connected to OUT, GND is connected to 0V. · Switch(pull-up enabled):DI is connected to one end of switch, the other end of switch is connected to GND.
2	DI2	
3	DI3	
4	GND	GND
5	DX1	Can be configured as DI or DO by setting the object 2004h:01h, configurable input polarity. · DO: The maximum load current is 8mA, which can be connected to LED and brake. · DI: The high level ranges from 3.0 to 3.3V, and the low level ranges from 0 to 0.5V.
6	AI	Analog input ranges from 0 to10V
7	PE	Shielding wire

Nimotion, inc. All rights reserved.

3.3.4 Wiring Diagram of Communication

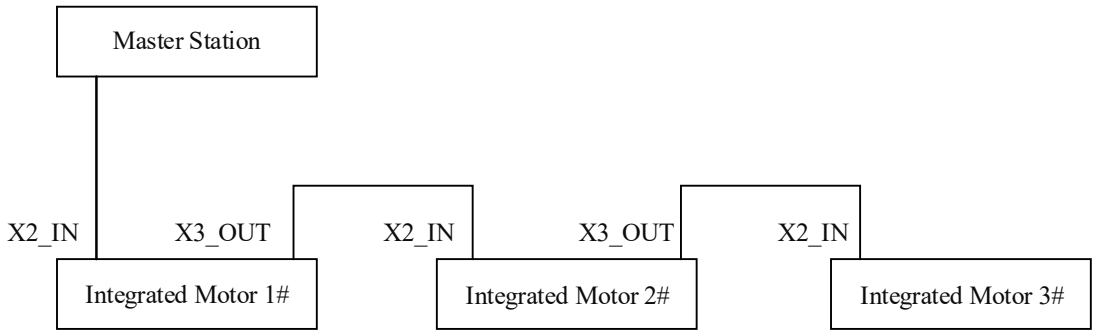

Figure18 Wiring Diagram of EtherCAT Communication

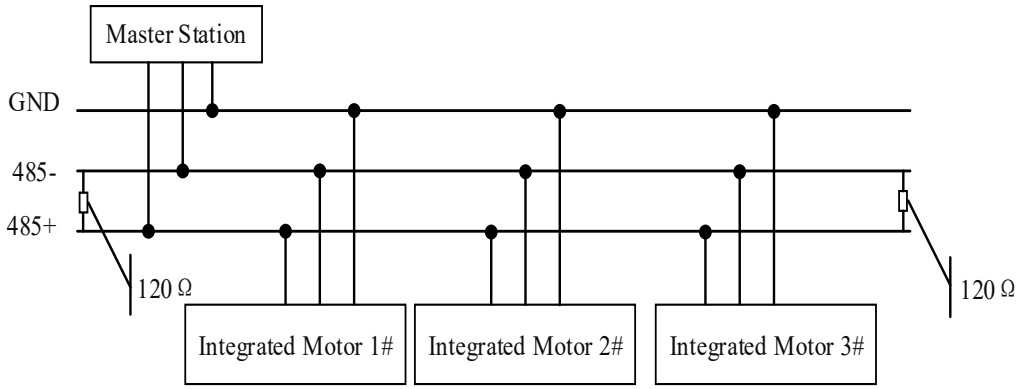

Figure19 Wiring Diagram of RS485 Communication

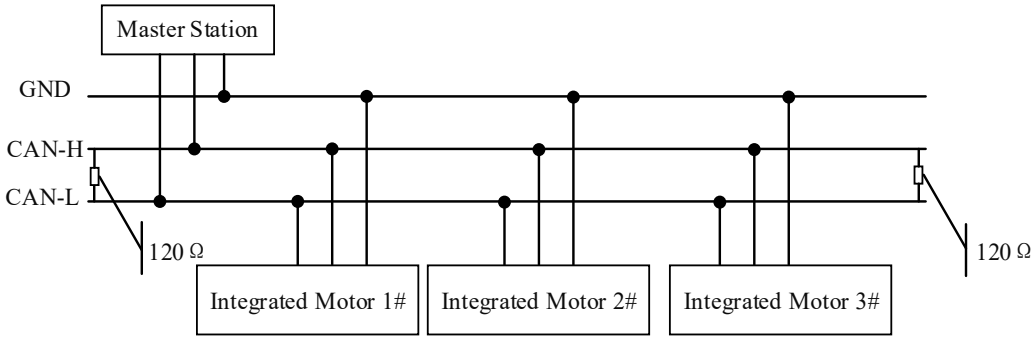

Figure20 Wiring Diagram of CANopen Communication

Nimotion, inc. All rights reserved.

3.3.5 Wiring Diagram of I/O

PMMP40 Series

DI1, DI2, DI3 (input terminals) are connected to the NPN sensor.

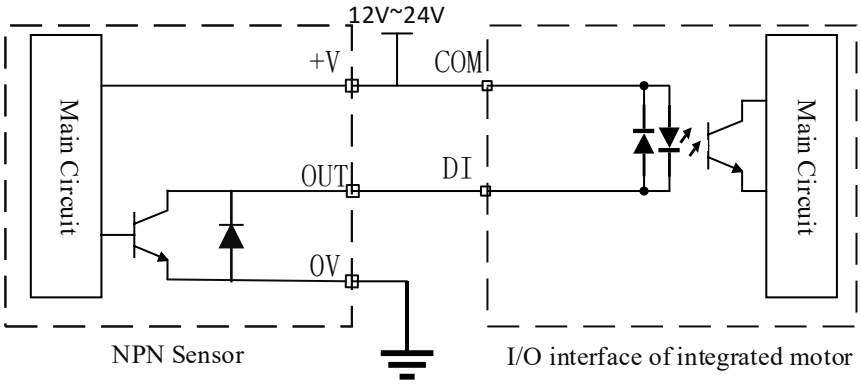

Figure21 Schematic diagram of DI input port is connected to NPN sensor

+V terminal of the sensor and the COM terminal of the I/O interface are connected to the positive 12~24V power supply, 0V terminal of the sensor is connected to the negative power supply, and DI terminal of the I/O interface is connected to OUT terminal of the sensor.

DI1, DI2, DI3 (input terminals) are connected to the PNP sensor.

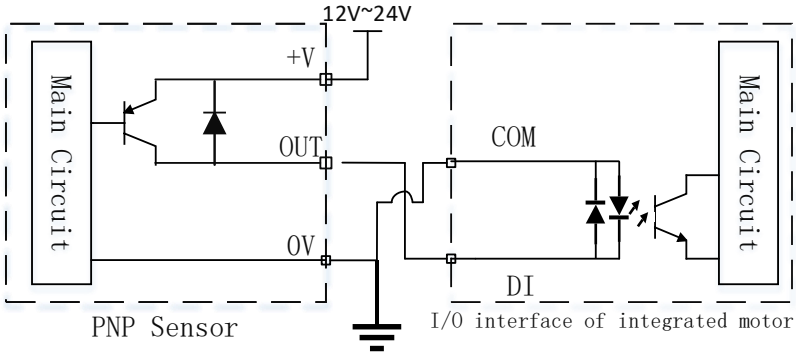

Figure22 Schematic diagram of DI input port is connected to PNP sensor

The 12~24V positive pole of the power supply is connected to +V terminal of the sensor, 0V terminal of the sensor is connected to the negative pole of the COM terminal of the I/O interface, and OUT terminal of the sensor is connected to DI terminal of the I/O interface.

Nimotion, inc. All rights reserved.

DI1, DI2, DI3 (input terminals) are connected to the switch(Common-anode).

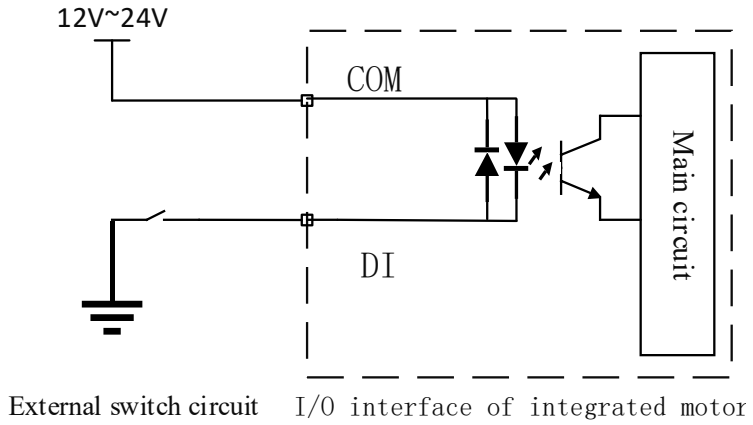

Figure23 Schematic diagram of DI input port is connected to switch

The 12~24V positive pole of the power supply is connected to COM terminal of the I/O interface, one end of the switch is connected to DI terminal of the I/O interface, and the other end of the switch is connected to the negative pole of the power supply.

DI1, DI2, DI3 (input terminals) are connected to the switch(Common cathode).

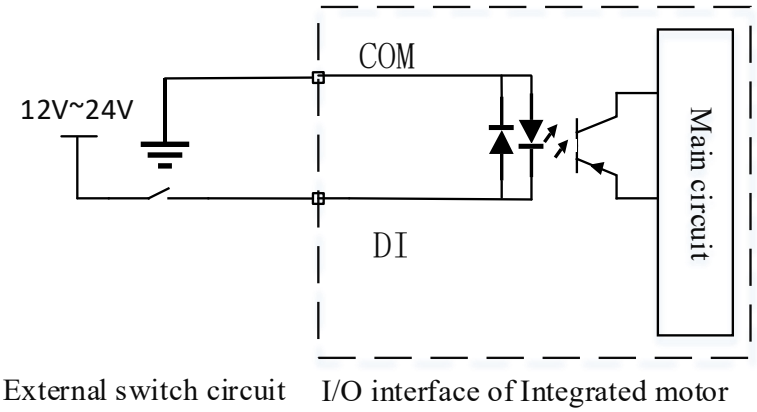

Figure24 Schematic diagram of DI input port is connected to switch

The 12V~24V positive pole of the power supply is connected to one end of the switch, the other end of the switch is connected to DI terminal of the I/O interface, and COM terminal of the I/O interface is connected to the negative pole of the power supply.

Nimotion, inc. All rights reserved.

DI1, DI2, DI3 (input terminals) are connected to pulse.

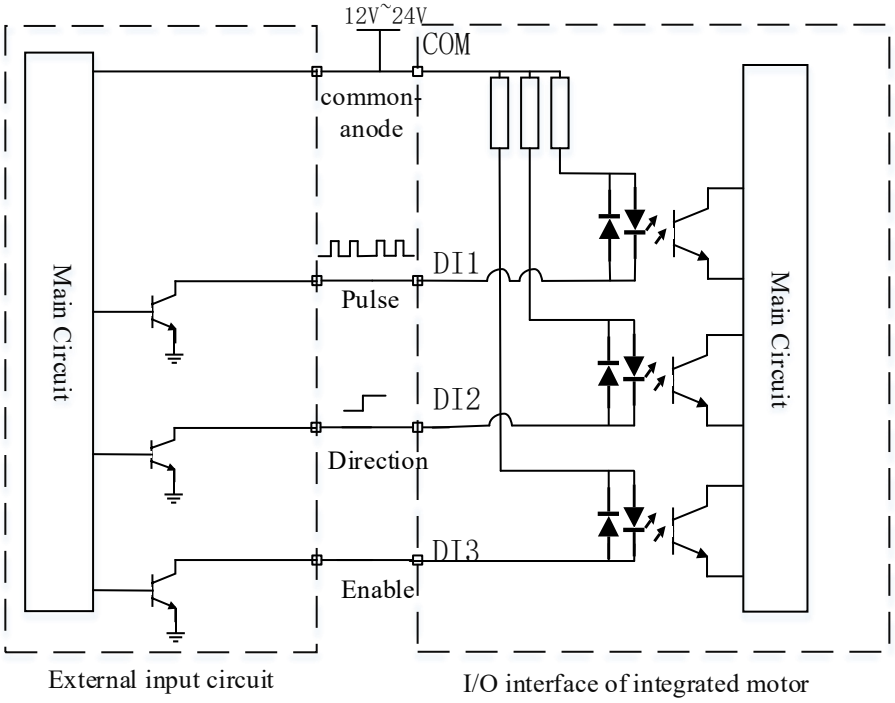

Figure25 Schematic diagram of DI input port is connected to pulse

DO1 (output terminal) is connected to the LED.

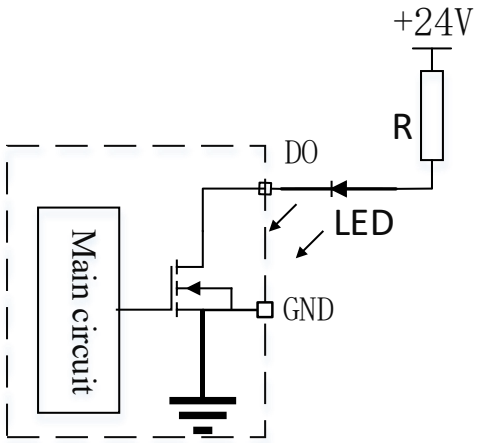

Figure26 Schematic diagram of DO Port is connected to the LED

The positive terminal of the power supply VCC is connected to the positive electrode of the LED lamp after the current limiting resistor, DO terminal of the I/O interface is connected to the negative electrode of the LED lamp, and GND terminal of the I/O interface is connected to the negative electrode of the power supply.

Nimotion, inc. All rights reserved.

AI port is connected to analog input.

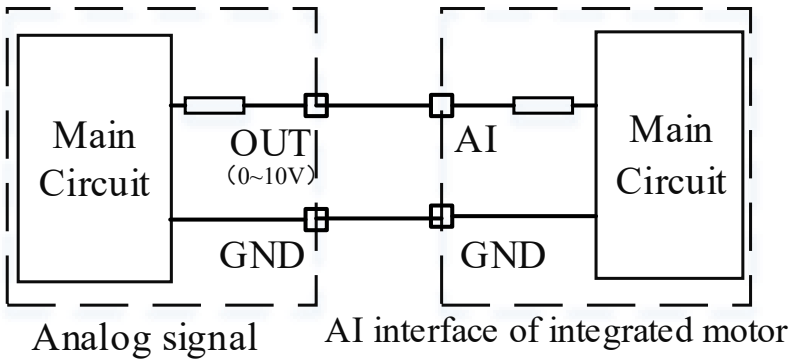

Figure27 Schematic diagram of AI port is connected to analog signal

AI terminal of integrated motor is connected to the OUT terminal of the analog signal, and the GND of the motor is connected to the GND of the analog signal.

Nimotion, inc. All rights reserved.

PMMP60/PMMP80 Series

DI1, DI2, DI3 ,DX(Configured as DI) are connected to the NPN sensor.

Configure pull-up by setting the object 2003_h: 15_h, and write 1 to the object to enable pull-up.

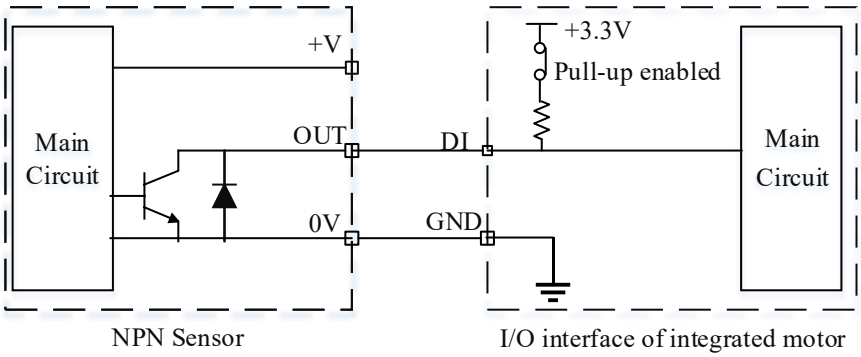

Figure28 Schematic diagram of DI input port is connected to NPN sensor

+V terminal of the sensor is connected to the positive pole of power supply, 0V terminal of the sensor and GND terminal of I/O interface of motor is connected to ground, DI terminal of I/O interface of motor is connected OUT terminal of the sensor.

DI1, DI2, DI3 ,DX(Configured as DI) are connected to the PNP sensor.

Configure pull-up by setting the object 2003_h: 15_h, and write 0 to the object to cancel pull-up.

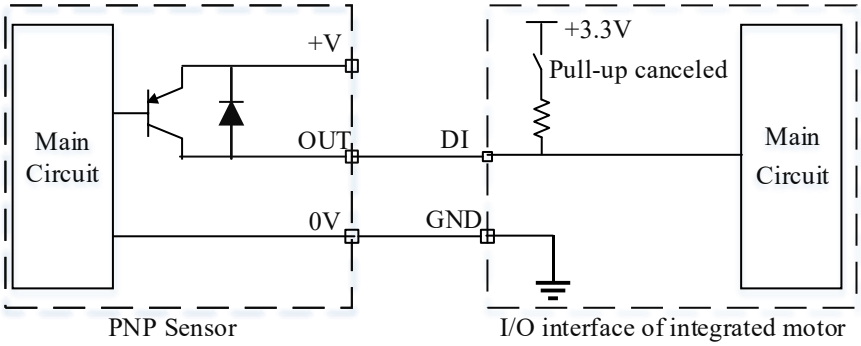

Figure29 Schematic diagram of DI input port is connected to PNP sensor

+V terminal of the sensor is connected to the positive pole of power supply, 0V terminal of the sensor and GND terminal of I/O interface of motor is connected to ground, DI terminal of I/O interface of motor is connected OUT terminal of the sensor.

Nimotion, inc. All rights reserved.

DI1, DI2, DI3 ,DX(Configured as DI) are connected to the switch.

Configure pull-up by setting the object 2003_h: 15_h, and write 1 to the object to enable pull-up.

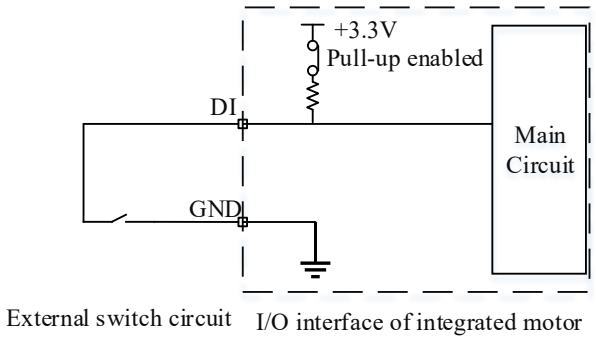

Figure30 Schematic diagram of DI input port is connected to switch

DI terminal of I/O interface of motor is connected to one end of switch, the other end of switch and the GND terminal of I/O interface of motor is connected to ground.

DI1, DI2, DI3 (input terminals) are connected to pulse.

Configure pull-up by setting the object 2003_h: 15_h, and write 1 to the object to enable pull-up.

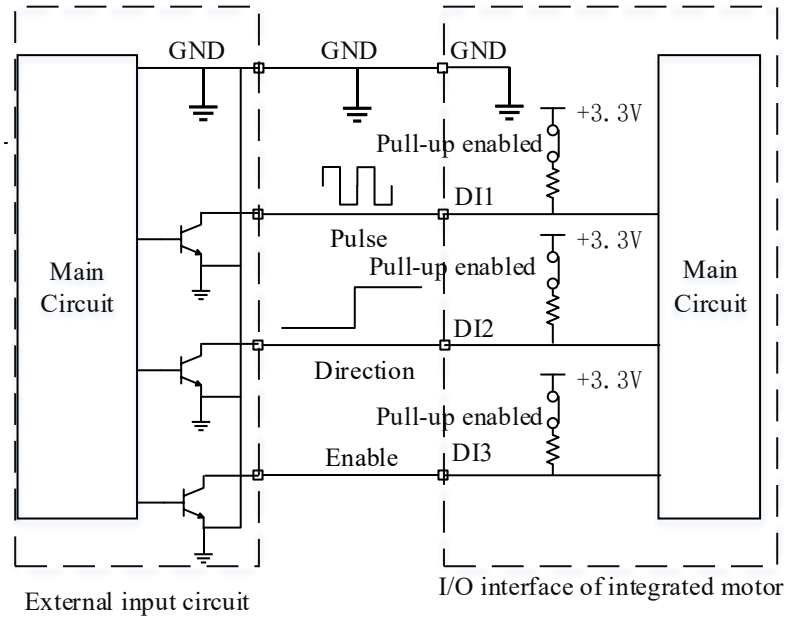

Figure31 Schematic diagram of DI input port is connected to pulse

Nimotion, inc. All rights reserved.

DX1 (Configured as DO) is connected to LED.

Configure digital output by setting the object 2004h: 01h.

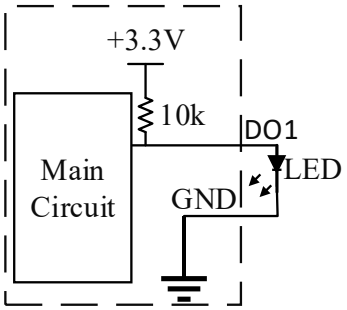

Figure32 Schematic diagram of DO Port is connected to the LED

DO terminal of I/O interface of motor is connected to the positive pole of LED, and the negative pole of LED and the GND terminal of I/O interface of motor is connected to ground.

AI terminal is connected to analog input.

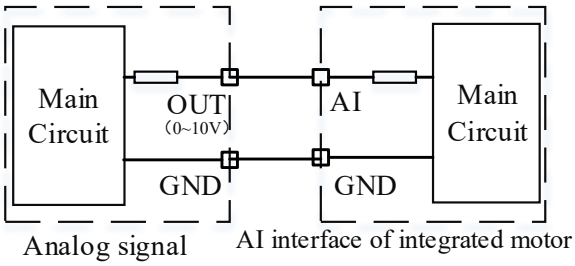

Figure33 Schematic diagram of AI port is connected to analog signal

AI terminal of integrated motor is connected to the OUT terminal of the analog signal, and the GND of the motor is connected to the GND of the analog signal.

Nimotion, inc. All rights reserved.

4. Install and Connect

4.1 Installation Precautions

4.1.1 Installation Places

① Please install it in the control cabinet without direct sunlight, and do not place flammable materials around it.

② Do not use this product in a corrosive environment such as hydrogen sulfide, sulfite, chlorine, ammonia, chlorinated gas, acid, alkali, salt, or in an inflammable gas environment or combustible materials.

③ No cutting fluid, oil mist, iron powder, iron filings and other places.

④ Well-ventilated, dry and dust-free place.

⑤ A place without vibration.

⑥ Do not use gasoline, diluent, alcohol, acid and alkaline cleaning agent, so as to avoid the shell discoloring or damage.

4.1.2 Installation Requirements

① The installation direction of the integrated motor should be consistent with the direction of the heat sink and the heat dissipation duct of the system to ensure good heat dissipation effect.

② The wiring end face of the integrated motor shall reserve at least 30mm space for easy maintenance and operation.

③ The integrated motor wiring should be tied at a distance of 30 ~ 40mm from the motor to prevent the loosening of the plug for a long time.

④ Before powering the integrated motor, make sure that the communication cables and power cables are connected correctly. If you need to use the IO function, you should connect the corresponding IO cables (Recommend using our company's standard cable).

⑤ According to the company's selected communication cable to correctly select the installation network, optional terminal matching head installed in the network terminal position, to achieve signal terminal matching.

4.1.3 Installation Cautions

① When connecting with the machine, please use the coupling, and keep the axis of the servo motor and the axis of the machine in a straight line.

② Do not make the wire "bend" or exert "tension" on it;

③ When connecting the connectors, make sure that there are no foreign objects such as garbage or metal sheets in the connectors.

④ When carrying out the operation under the condition of keeping the cable connected, please be sure to hold the main body of the integrated motor. If only catch cables carrying, could damage the connector or cut cables.

⑤ If the use of curved cable, should be fully paid attention in the wiring operation, do not apply stress to the connector part. If stress is applied to the connector portion, it may cause connector damage.

Nimotion, inc. All rights reserved.

4.2 Cable Wiring Requirement

4.2.1 Wiring Requirements

Alternating electromagnetic fields around AC cables, especially in the power supply and integrated motor cables, may interfere with the integrated motor and other equipment. Please note the following requirements:

① The integrated motor power cord adopts 16AWG ~ 24AWG twisted-pair copper wire, and the temperature resistance should be greater than or equal to 105℃(the value is the recommended value, please select according to the actual working conditions).

② The communication cable adopts the characteristic impedance of 120Ω, 22AWG ~ 24AWG twisted-pair shielded line, and the temperature resistance should be greater than or equal to 105℃(the value is the recommended value, please select according to the actual working conditions).

③ The length of the IO channel signal cable does not exceed 1m, the use of 24AWG copper wire, the temperature resistance should be greater than or equal to 105 ℃ (the value is the recommended value, please select according to the actual working conditions), greater than 1m signal to choose a shielded cable.

④ All kinds of cable wiring should be divided into bundles and slots. Different types of cables should be crossed, and cables should be at right angles to each other. The I/O signal cable and communication cable are more than 0.2m away from the system power cable.

4.2.2 Grounding Requirements

The product adopts common ground design internally, and the power supply, communication cable and IO port are common ground design. To make the product correctly grounding, please observe the following precautions:

① In order to prevent electric shock, please be sure to ground the ground terminal. For the method of grounding, please follow the relevant national or regional electrical regulations.

② In order to prevent electric shock, please confirm that the protective grounding conductor conforms to the technical specifications and local safety standards, and minimize the length of the grounding wire.

③ When using multiple devices, follow the instructions for grounding all devices. Improper grounding of the device may cause maloperation of the equipment.

④ The grounding terminal must be reliably grounded, otherwise it will lead to abnormal work or even damage of the equipment.

Nimotion, inc. All rights reserved.

⑤ Do not share the ground terminal with the neutral wire (N-terminal)of the power supply.

⑥ Protective grounding conductor must use yellow-green copper conductor cable, and cannot be connected with circuit breakers and other switchgear.

⑦ Recommended installation on the conductive metal surface, to ensure that the entire conductive bottom of the equipment and the installation surface is good lap.

Common Power Supply Ground

In the communication networking of multiple integrated motors, if there are multiple power supplies in the system, the power supply should be common ground (common GND, that is, the negative pole of the power supply). The ground resistance of the electrical system involved in Unicom's communication bus is < 4Ω.

Common Signal Ground

The main controller, communication bus master station and communication converter communication port connected to the communication bus of the integrated motor shall be isolated by electrical isolation technology, and the ground of the communication ground (RS485_GND, CAN_GND) and the communication interface of the integrated motor shall be common (common GND, namely communication interface GND).

Protective Grounding

The integrated motor shell should be installed to the motor bracket through the mounting hole, and the bracket should be reliably connected to the ground. The resistance between the integrated motor shell, the accessible grounding metal shell and the grounding terminal should not exceed 0.1Ω.

Nimotion, inc. All rights reserved.

4.3 Communication Distance

4.3.1 RS485 Communication

RS485 communication transmission medium can choose type A and type B two kinds of wire, A is shielded twisted pair, B is ordinary twisted pair. However, Type A wire is specified in the EN50170 standard, and Type A has a larger extension length than type B, as shown in Table12.

Table12 Communication Transmission Medium of RS485

Parameters	Type A	Type B
Characteristic impedance（Ω）	135~165	100~130
Capacitance per unit length（PF/m）	<30	<60
Loop resistance（Ω/km）	110	——
Wire core diameter（mm）	0.64	>0.53
Wire core cross-sectional area（mm^2）	>0.34	>0.22

Table13 Communication Distance and Baud Rate of RS485

Baud rate (bps)	Bus length (m) (Type A)	Bus length (m) (Type B)	Note
1.5M	100	Not Recommended	This parameter is the estimation in the ideal state and is for reference only. The actual application is affected by many factors. Please refer to the actual application
1M	200	100	
500k	400	200	
256k	800	600	
115.2k	1000	1000	
57.6k	1200	1200	
38.4k	1200	1200	
19.2k	1200	1200	
9.6k	1200	1200	

Under the ideal environment (the load RS485 bus device is one, the baud rate is 9600bps, the use of high-quality communication wire) the longest communication distance of RS485 bus theory is about 1200m.

RS485 bus communication distance reduction factors: there are several loads RS485 equipment, wire characteristic impedance does not meet the standard, the wire diameter is small, non-quality converter, equipment lightning protection complex and baud rate is too high factor, will shorten the RS485 communication distance.

For how to reduce interference and the impact of communication distance reduction: Both to increase the transmission distance, but also to ensure the stability of the transmission signal. It is usually necessary to stay away from interference sources (large mechanical equipment) as far as possible, increase shielding measures, increase repeaters, reduce the transmission rate (baud rate), and use high-quality communication cables and converters and so on.

Nimotion, inc. All rights reserved.

4.3.2 CAN Communication

Table14 Communication Distance and Baud Rate of CAN

Baud rate (bit/s)	Bus length (m)	Nominal bit time(μs)	Sampling point location	Sampling point range	Note
1M	25	1	87.5%（875 ns）	75%~90%	This parameter is the estimation in the ideal state and is for reference only. The actual application is affected by many factors. Please refer to the actual application
800k	50	1.25	87.5%（1.09375 μs）	75%~90%	
500k	100	2	87.5%（1.75 μs）	85%~90%	
250k	250	4	87.5%（3.5 μs）	85%~90%	
125k	500	8	87.5%（7 μs）	85%~90%	
50k	1000	20	87.5%（17.5 μs）	85%~90%	
20k	2500	50	87.5%（43.75 μs）	85%~90%	
10k	5000	100	87.5%（87.5 μs）	85%~90%	

The above tabulated data are the parameters in the ideal state. In practical application, when the distance of the wire to transmit the signal is too long, the signal will be distorted due to environmental problems (such as electromagnetic, electric field interference) and the characteristic impedance of the wire itself.

How to optimize the communication distance of the CAN bus: reduce the length of the branch, add appropriate matching resistance to the long branch, use shielded cables and correct grounding, reduce the number of CAN bus nodes, reduce the transmission rate (baud rate), increase the CAN repeater or hub, etc.

4.3.3 EtherCAT Communication

Table15 Communication Distance of EtherCAT

Cable type	Bus length (m)	Note
100Base-TX (IEEE802.3)	100	This parameter is the estimation in the ideal state and is for reference only. The actual application is affected by many factors. Please refer to the actual application
100Base-FX	＞100	

EtherCAT is a high-performance, low-cost, easy-to-apply, topologically flexible industrial Ethernet technology that can be used for ultra-high-speed I/O networks at the industrial field level, using the standard Ethernet physical layer, transmission media twisted pair or fiber (100Base-TX or 100Base-FX).

Nimotion, inc. All rights reserved.

4.4 Cable Wiring

4.4.1 Wiring Diagram of Communication

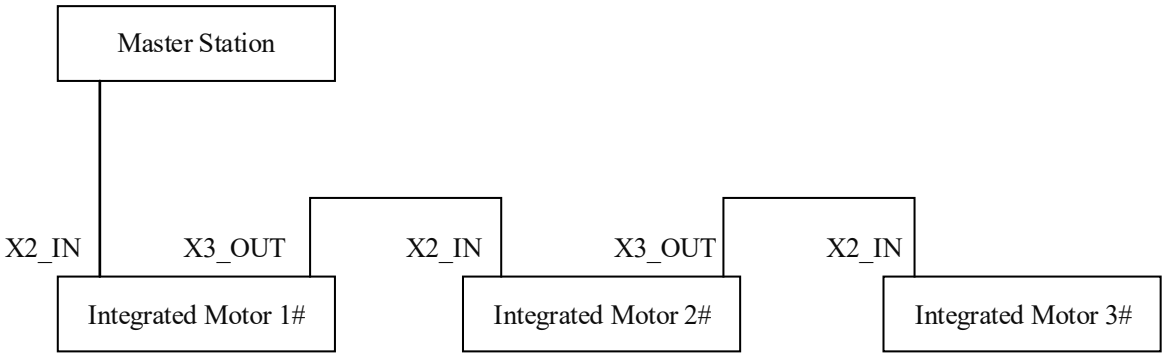

Figure4-1 Wiring Diagram of EtherCAT Communication

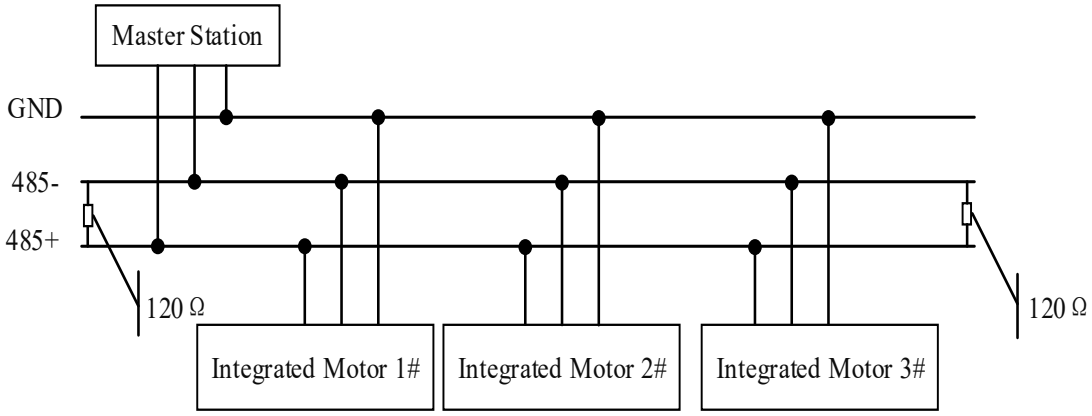

Figure4-2 Wiring Diagram of RS485 Communication

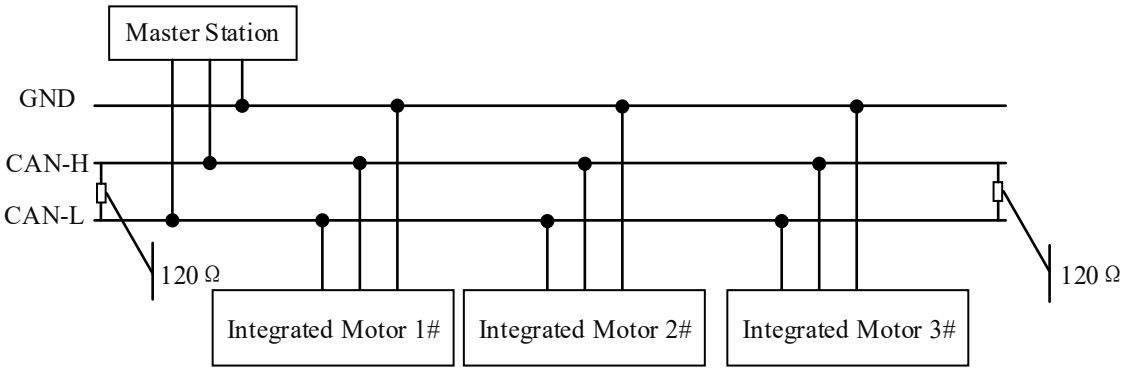

Figure4-3 Wiring Diagram of CANopen Communication

Nimotion, inc. All rights reserved.

4.4.2 Debugging Wiring

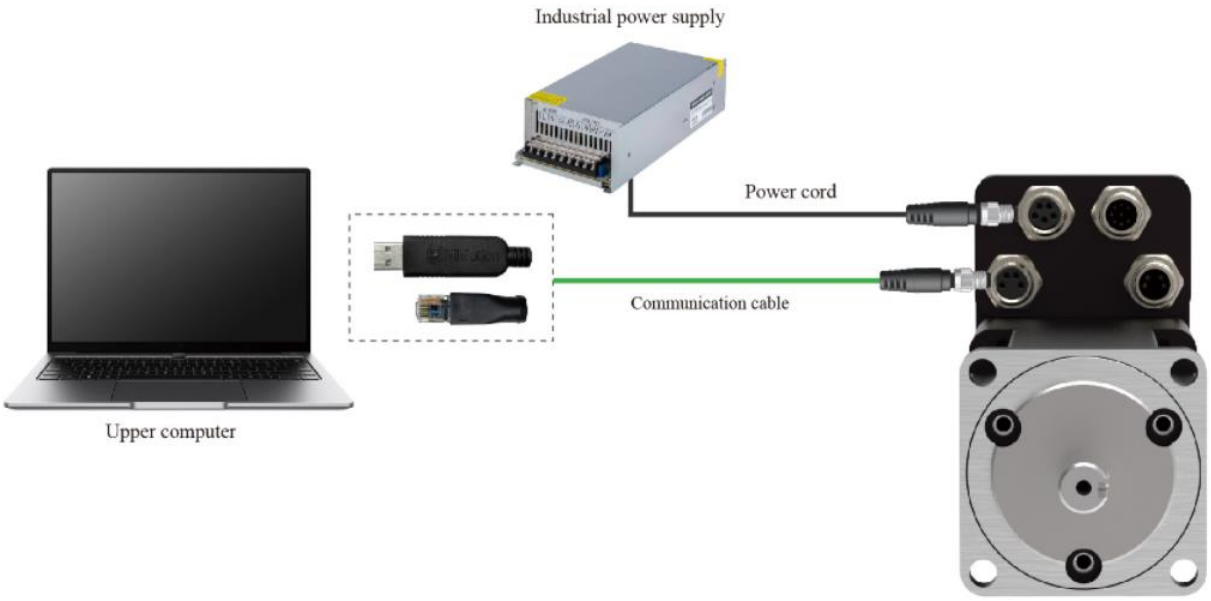

Figure4-4 Debugging wiring connection

4.4.3 External Control Wiring

① Control via communication bus

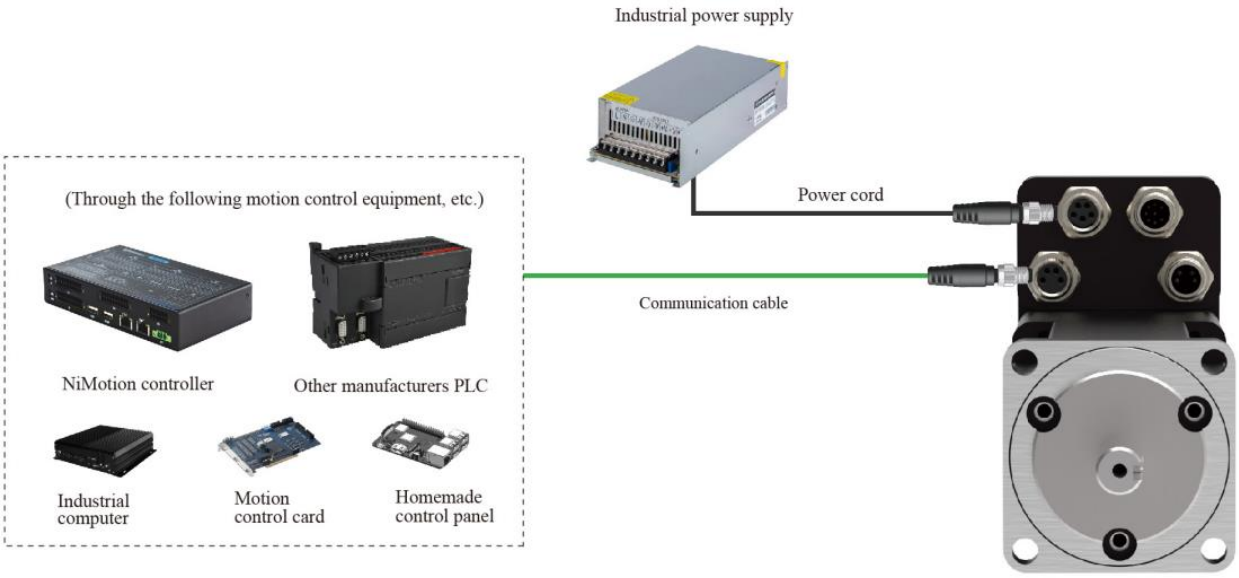

Figure4-5 External control wiring connection (Control via communication bus)

Nimotion, inc. All rights reserved.

② Control via IO port(Controller)

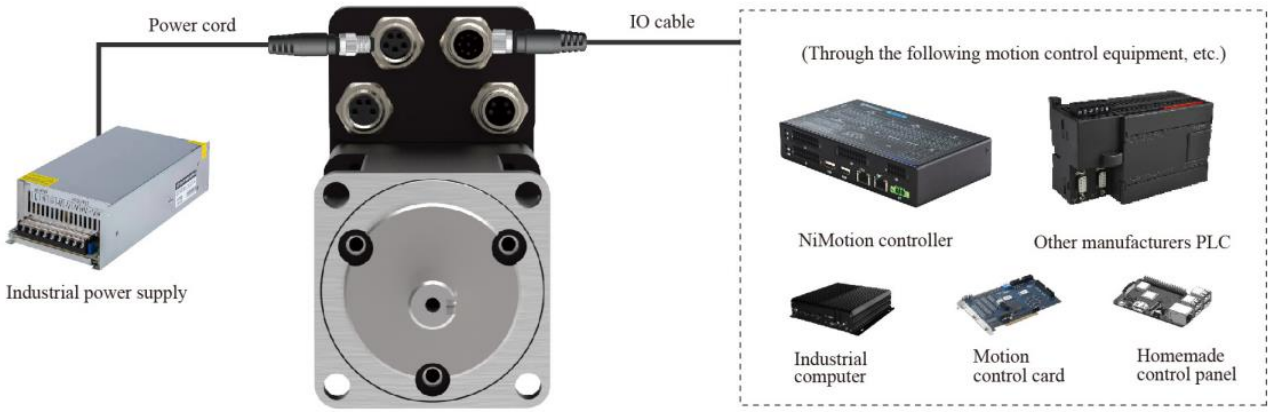

Figure4-6 External control wiring connection

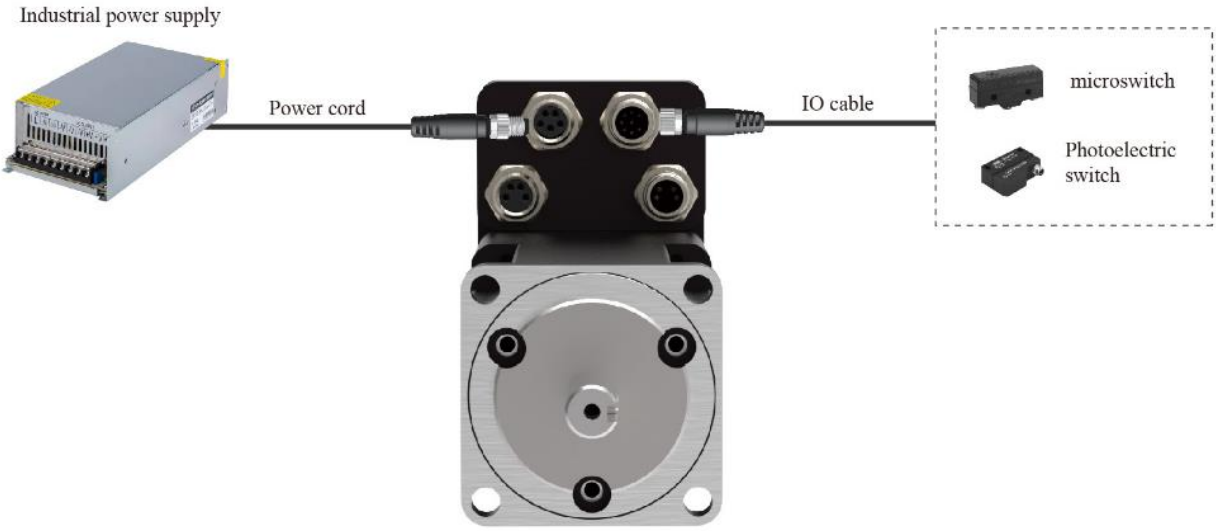

Figure4-7 External control wiring connection (The sensor is controlled through I/O ports)

4.4.4 Communication Networking Wiring

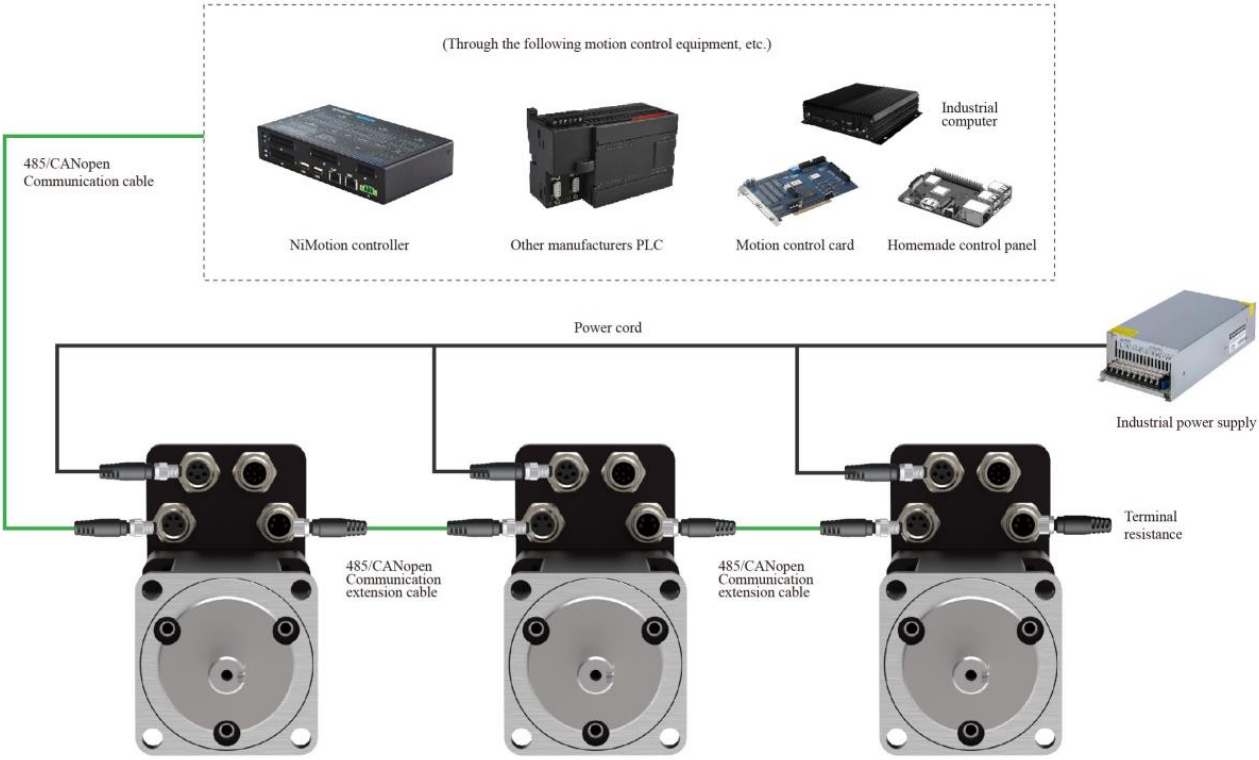

Figure4-8 Network topology

4.4.5 Network wiring requirements

a. RS485 networking requirements

① RS485 can use a variety of types of media for transmission, but should use in accordance with the "GBT 19582.2-2008 Modbus protocol implementation guide on serial links" standard cable.

② RS485 bus please be sure to use Daisy chain connection, all nodes RS485 signal reference connected together.

③ The terminal matching resistor must be configured at the end of the cable to prevent RS485 signal from reflection.

④ The node branch should be as short as possible: long branches cause obvious characteristic impedance mismatch, and then cause signal reflection, so the branch should be ensured as short as possible, generally not more than 30cm.

⑤ The number of bus nodes: depends on the actual application conditions and transmission media hardware characteristics.

b. CAN networking requirements

① Cables shall be connected in accordance with GBT 41588.3-2022 Road Vehicle Controller LAN (CAN) Part 3: Low-Speed Fault-tolerant, media-related Interfaces.

Nimotion, inc. All rights reserved.

② The CAN bus please be sure to use Daisy chain connection, and the reference ground of CAN signal of all nodes is connected together.

③ The terminal matching resistor must be configured at the end of the cable to prevent CAN signal reflection.

④ The length of the branch node should not be too long, generally not more than 30cm.

⑤ The number of bus nodes: depends on the actual application conditions and transmission media hardware characteristics.

c. EtherCAT Networking requirements

① The twisted-pair network cable (special EtherCAT network cable) conforming to the standard of IEC61158: Industrial Communication Network - Field Bus Specification should be made to improve the resistance to high-frequency magnetic field noise interference and reduce the radiation of the cable.

② Support Daisy chain, ring, star, tree and other topological structures.

③ The integrated motor network cable cabinet should be separated from other cables, especially strong electric lines, as far as possible away from interference sources (such as transformers, inverters, cabinet fans, etc.), as far as possible to reduce interference.

Nimotion, inc. All rights reserved.

5. Product Selection

5.1 Cable Selection

Table 16 Cable Selection

PMMP series integrated servo motor cable selection table	
Cable	**Cable definition diagram**
Power cable (PMMP40XX) VDDX003P	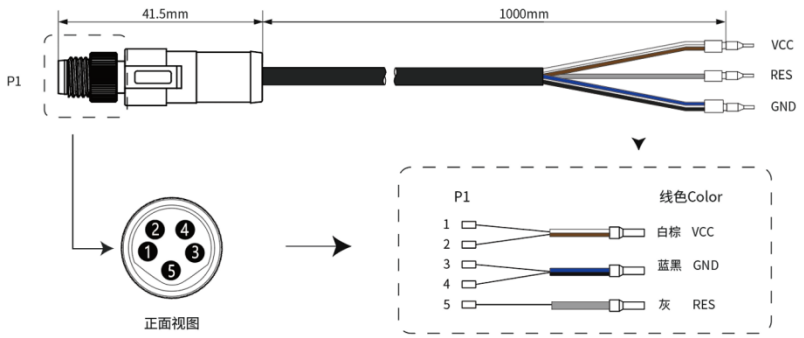
Power cable (PMMP60XX) VDDX001P	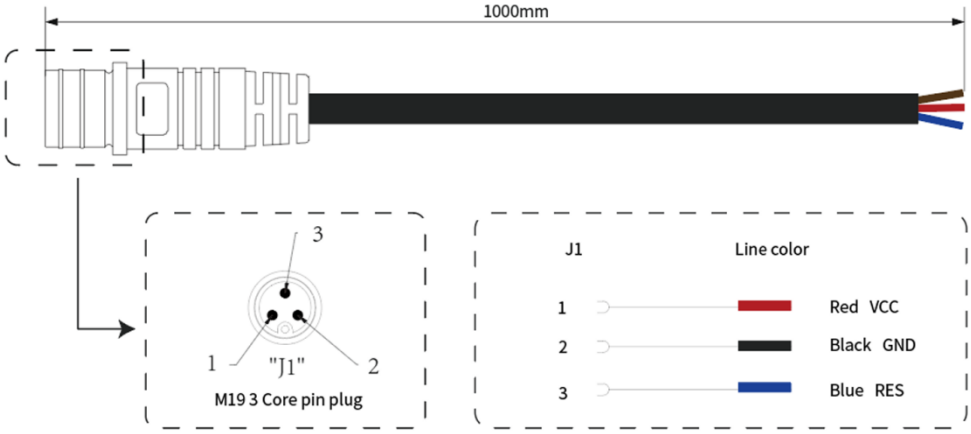

Nimotion, inc. All rights reserved.

PMMP series integrated servo motor cable selection table	
Cable	**Cable definition diagram**
Power cable (PMMP80XX) VDDX002P	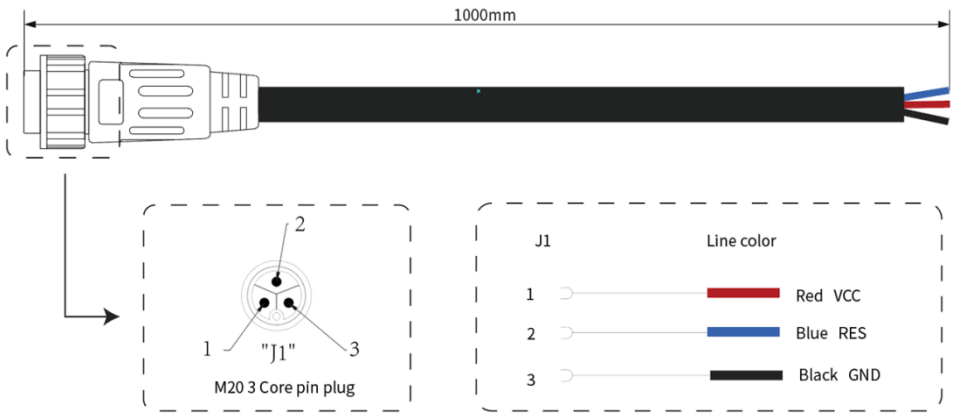
I/O cable （PMMP4010D） VDIX007	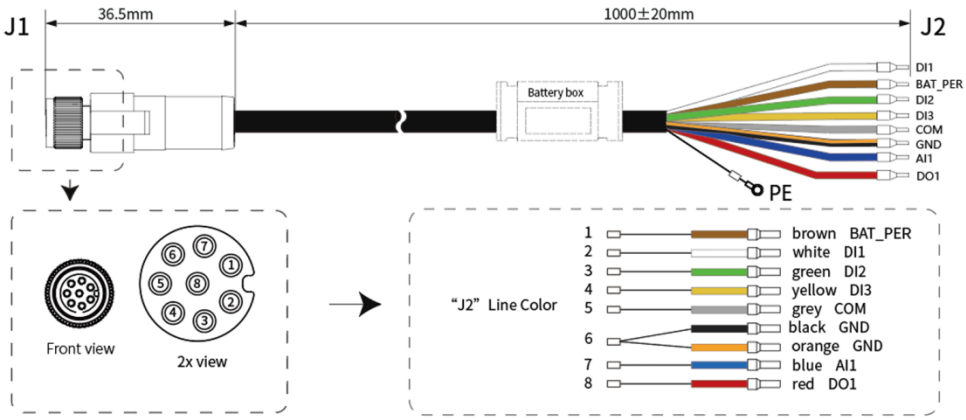
I/O cable （PMMP4010B） VDIX004	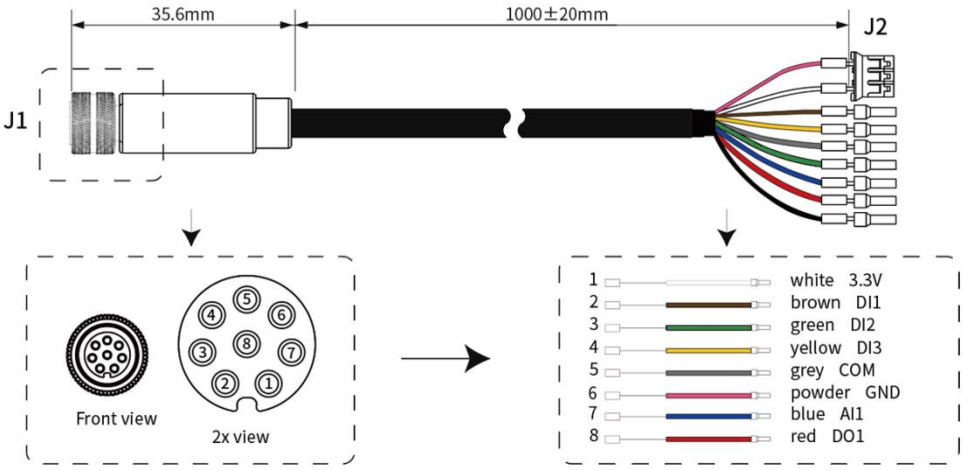

Nimotion, inc. All rights reserved.

PMMP series integrated servo motor cable selection table	
Cable	**Cable definition diagram**
I/O cable (PMMP60&80) VDIX002P	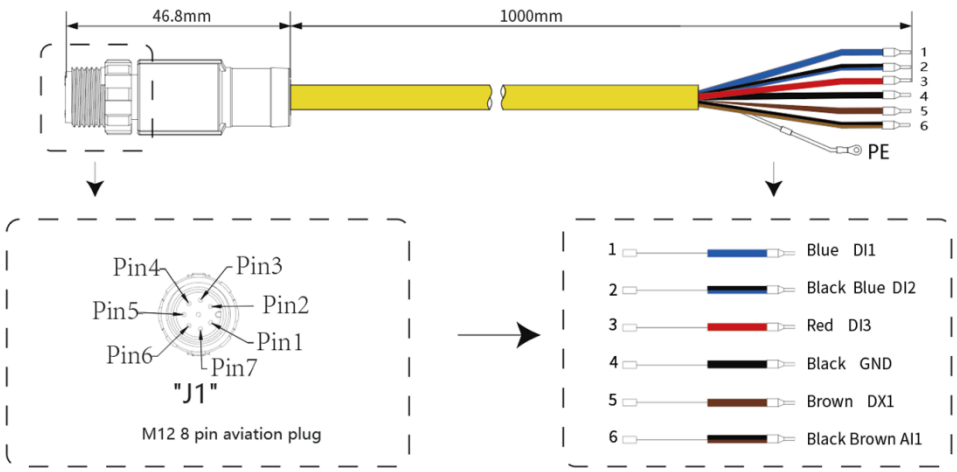
Communication cable (COE) VDCX003P	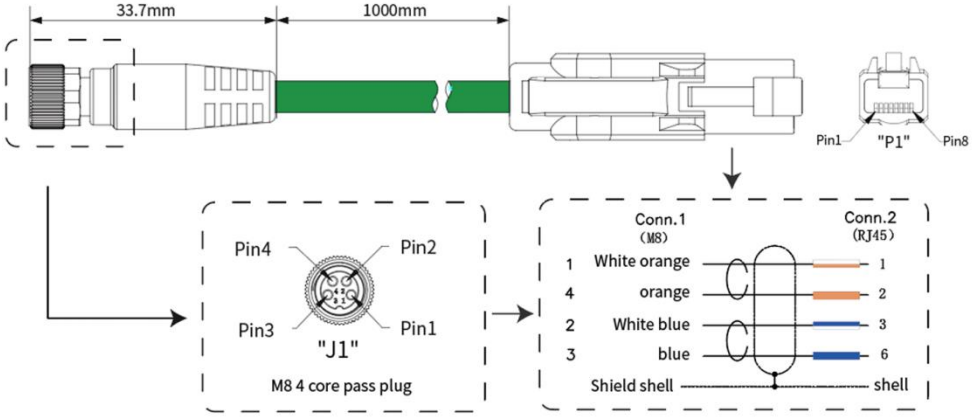
Communication cable (COE) VDCX005P	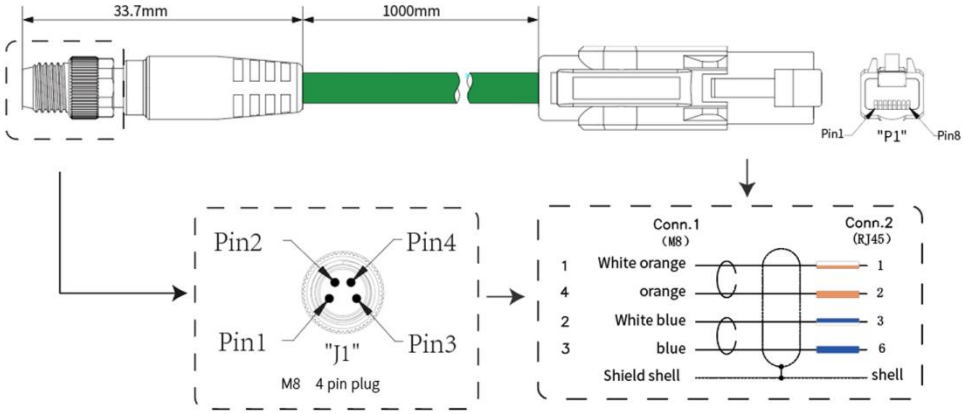

Nimotion, inc. All rights reserved.

PMMP series integrated servo motor cable selection table	
Cable	**Cable definition diagram**
Communication extension cable (CAN/RS485/COE) VDCX010P	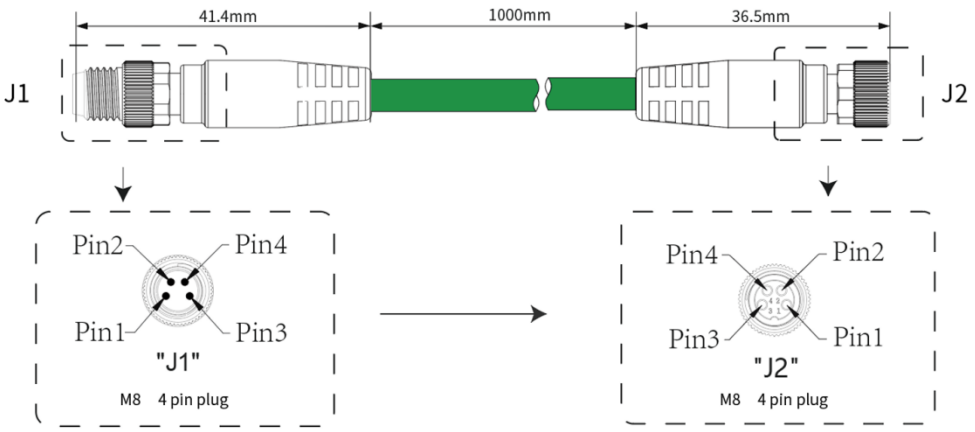
Communication cable (CAN/RS485) VDCX008P	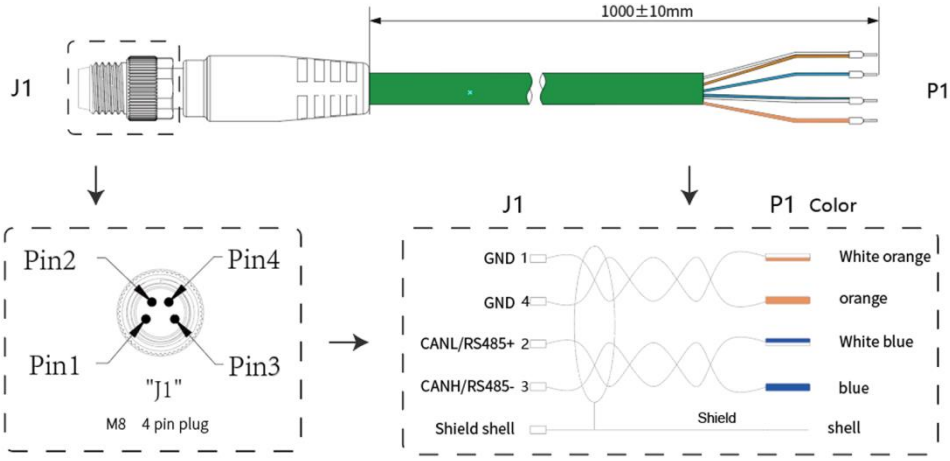
Communication cable (CAN/RS485) VDCX009P	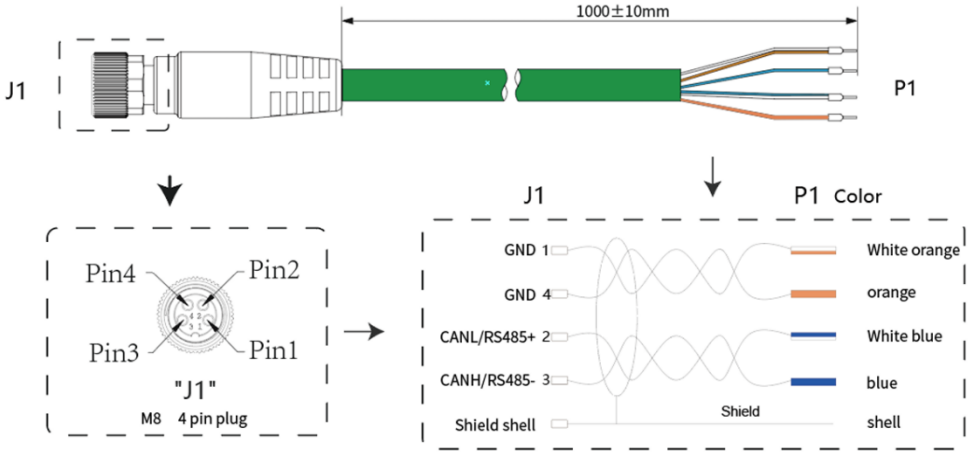

Nimotion, inc. All rights reserved.

PMMP series integrated servo motor cable selection table	
Cable	**Cable definition diagram**
Converter SCM-USBCANI-L-LP	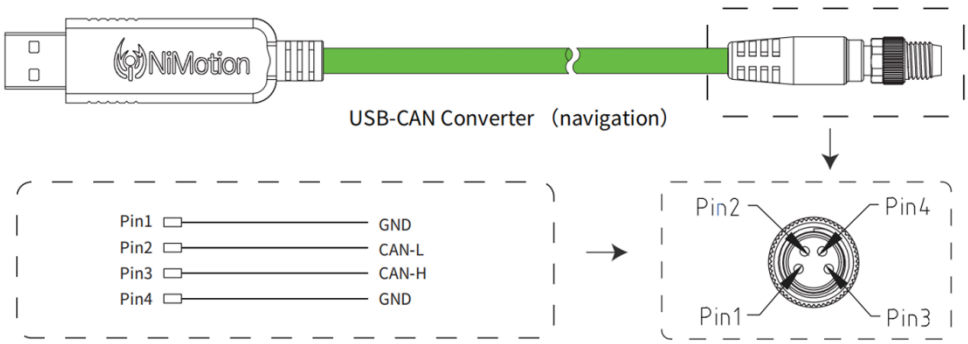
Converter SCM-USB485A-L-LP	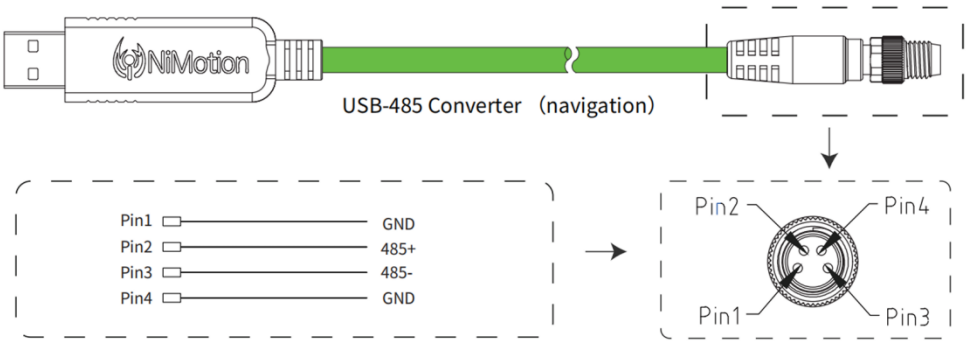
Terminal resistance STRX001-120	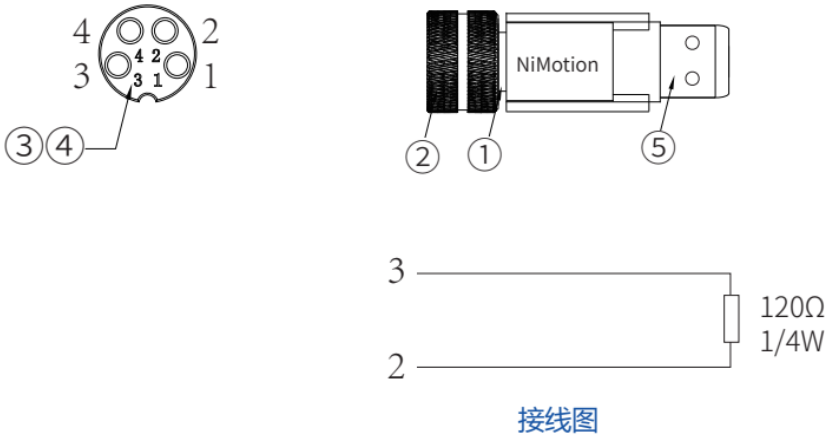

1. Communication cable: Used for RS485/CANopen/EtherCAT integrated servo motor communication.
2. Power cord: Used to introduce power to the integrated servo motor.
3.I/O wire: Used to connect the IO port to the control terminal.
4. Terminal resistance: Used to connect at the end of the communication bus lines, improve the anti-interference ability.

Nimotion, inc. All rights reserved.

5.2 Brake Resistance

Servo drive system for dynamic performance is higher, need frequent start-stop quickly, to meet the needs of rapid positioning. In the process of braking, the speed of the motor decreases from the working speed to the static speed with a large deceleration. The motor works in the state of power generation and converts the mechanical kinetic energy into electric energy, which will cause the rise of the bus capacitor voltage. The action of braking resistance is when the bus voltage capacitor to rise to value, the excessive energy dissipation by brake resistance. Improper selection of brake resistance may lead to system failure or even brake resistance failure. Therefore, it is necessary to calculate the braking capacity accurately and select the appropriate braking resistance to ensure the fast response performance of the servo system.

When the motor makes a reciprocating action, kinetic energy will be converted into electric energy and fed back to the busbar capacitor. When the busbar voltage exceeds the braking voltage (2001h:0Fh), the braking resistor will consume the excess feedback energy. The following table shows the braking energy E generated by our integrated servo motor from 3000rpm to stop:

Table 17 Brake energy table

Model of integrated model	Power	Rotor inertia（10^{-4}kg·m^2）	Braking energy E（J）
PMMP4010X-XX	100W	0.039	0.17
PMMP6020X-XX	200W	0.19	0.95
PMMP6040X-XX	400W	0.25	1.25
PMMP8075X-XX	750W	1.2	6.0

Nimotion, inc. All rights reserved.

The braking resistance of the integrated servo motor is divided into two types: built-in and external. It is configured by NiMotion software (2002_h: 13_h setting, 0~ internal (factory default), 1~ external, effective when powered on again, factory default 55V trigger). The integrated servo motor of our company is designed with built-in brake resistance, and can also be equipped with external brake resistance. The recommended specifications of built-in and external brake resistance of each model are shown in the table below:

Table 18 Brake resistance specification sheet

Model of integrated model	Power	Built-in brake resistance specifications	The maximum allowable resistance value of the external brake resistance	External brake resistance power
PMMP4010X-XX	100W	30Ω，32W	30Ω	According to the actual working condition, calculated by the following selection process and formula
PMMP6020X-XX	200W	15Ω，25W	15Ω	
PMMP6040X-XX	400W	15Ω，25W	15Ω	
PMMP8075X-XX	750W	15Ω，35W	15Ω	

For the selection and use of external brake resistors, it is necessary to determine whether to use external brake resistors through the corresponding selection process, and calculate the brake resistance specifications through the relevant formula. The following figure is the flow chart of brake resistance selection.

Nimotion, inc. All rights reserved.

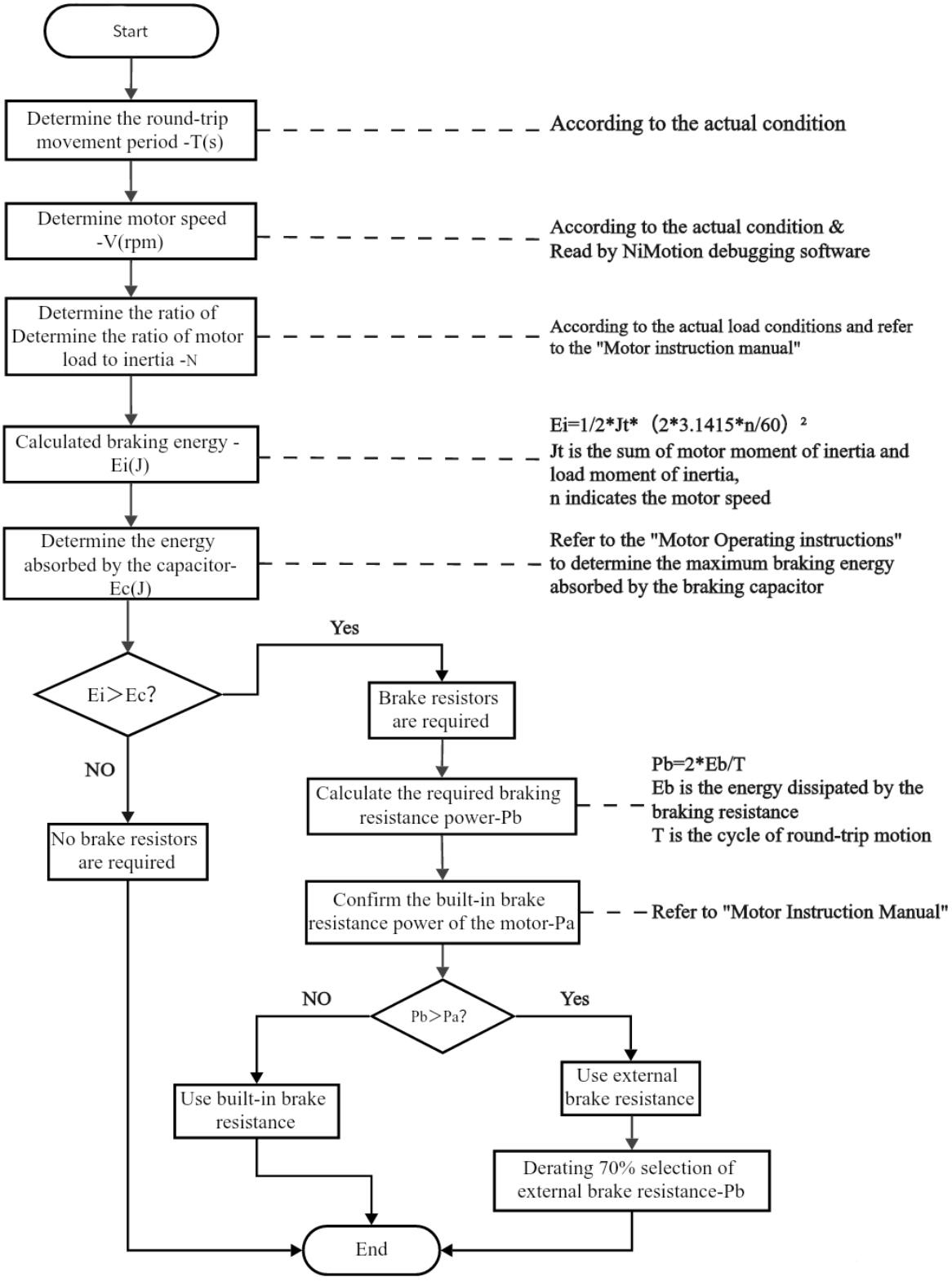

Figure 5-1 Brake resistance selection flow chart

The calculation of brake resistance power can be divided into two working conditions: no external load torque and external load torque. The specific difference between the two working conditions and the relevant calculation details, please refer to our "brake resistance selection and calculation" document.

Nimotion, inc. All rights reserved.

6. Alarm Function

Table19 Table of Alarm Function

Alarm Code	Alarm Contents	Default Alarm Type	Self reset or not
0x2300	Motor overcurrent alarm	Fault	No
0x4012311	Motor overload alarm	Alarm	Yes
0x3002312	Motor stalled alarm	Pause and lock the shaft	No
0x1013210	Power supply overvoltage alarm	Fault	Yes
0x1013220	Power undervoltage alarm	Fault	Yes
0x14210	Overtemperature alarm	Fault	Yes
0x14220	Low temperature alarm	Fault	Yes
0x5080	Drive failure	Fault	No
0x5540	Flash operation failure	Fault	No
0x5541	Flash initialization failure	Fault	No
0x4005542	Flash validation error warning	Alarm	No
0x5543	No parameters in flash user area	Fault	No
0x6000	Hardware initialization failure	Fault	No
0x16320	Parameter setting error	Fault	Yes
0x6321	Registration failure	Fault	No
0x7305	Z pulse fault	Fault	No
0x4017307	Encoder warning	Alarm	Yes
0x17310	Overspeed	Fault	Yes
0x3017501	Communication failure	Alarm	Yes
0x4017502	Illegal address	Alarm	Yes
0x4017503	Illegal data value	Alarm	Yes
0x4017505	Confirmation in communication	Alarm	Yes
0x4017506	Slave in communication	Alarm	Yes
0x401750C	Request data is larger than mapping data	Alarm	Yes
0x401750D	The number of request data is not equal to the number of mapping data	Alarm	Yes
0x401750E	The address of the packet node is incorrect	Alarm	Yes
0x8610	The origin regression timeout	Fault	No
0x8611	Out of position	Fault	No
0x3018613	Software limit error	Pause and lock the shaft	No
0x3018614	The limit switch is incorrect	Pause and lock the shaft	No
0x4018615	Curve planning calculation error	Alarm	Yes
0x18616	Target location overflow	Fault	No

Nimotion, inc. All rights reserved.

Alarm Code	Alarm Contents	Default Alarm Type	Self reset or not
0x5018617	Curve planning parameters are too small	ignore	Yes
0xFF01	Motor parameter identification failure	Fault	No
0x0401FF02	Parameter saving fault	Alarm	Yes
0x1007301	Encoder battery low voltage fault	Fault	No
0x4017302	Encoder battery undervoltage alarm	Alarm	Yes
0x7303	Encoder communication failure	Fault	No
0x1017304	Encoder multi-turn count error	Fault	No
0x1007309	Encoder battery failure fault	Fault	No
Note: Please refer to the corresponding communication manual for more details of alarm failure.			

Nimotion, inc. All rights reserved.

7. Daily Inspection and Maintenance

Table13 Daily Inspection and Maintenance

Inspection Items	Inspection Time	Key points of inspection and maintenance	Note
Vibration and sound inspection	Everyday	Visual and auditory judgment	-
Fixing and connecting	At least once a week	Periodically check whether the screws at the motor installation site, the motor rotor and the mechanical connection, the screws at the terminal station and the mechanical part are loose.	-
Inspection of appearance	Once a week	Wipe with cloth or clean with air gun.	-
Change oil seal (if any)	At least every 5000h/ time	Mechanically remove motor and replace oil seal	Motor with oil seal only
Battery replacement	Once a year	① When the integrated motor prompts 0x1007301 (encoder battery low voltage fault) or undervoltage 0x4017302 (encoder battery undervoltage alarm), the battery should be replaced in time. Note: When replacing the battery, the integrated motor power supply needs to be switched on. ② The integrated motor is not connected to the battery when it arrives: When used for the first time, the integrated motor will prompt 0x1007301 (Encoder battery low voltage fault) alarm after power-on. At this time, the battery needs to be connected, and the alarm can be cleared by pressing the button on the upper computer of NimStudio or sending a message to start the "Clear fault" function. ③ If the integrated battery is not used for a long time and the battery is removed: If used again, the integrated motor will prompt 0x1007301 (Encoder battery low voltage fault) alarm after power-on. At this time, the battery needs to be connected, and the alarm can be cleared by pressing the button on the upper computer of NimStudio or sending a message to start the "Clear fault" function.	Only 17-bit absolute value multi-turn encoder integrated servo motor
Comprehensive inspection	At least once every 20,000 hours or every 5 years	-	-

Nimotion, inc. All rights reserved.

Version Change Record

Version	Description of Revised Content	Date
A	Establish	2023-06-08
A01	Modified some content description	2025-04-02

Nimotion, inc. All rights reserved.

Email：nimotion-al@nimotion.com

Beijing NiMotion Control Technology Co.,Ltd.