版本 REV.MARK	变更内容 REVISION RECORD	签名 SIGNARURE	日期 DATE
A01	变更定义顺序	曹继伟	2025/5/12

接线表

端子	X1 电源				X4 I/O												X2 IN					X3 OUT				
位号	1	2	3	4	1	2	3	4	5	6	7	8	9	10	11	12	1	2	3	4	外壳	1	2	3	4	外壳
说明 CANopen	PE	48V+	GND	RES	DO1+	DO_COM	AI1	AGND	BAT_PWR	GND	STO_FB-/DI1+	STO_FB+/DI1-	NC/DI2+	STO_COM/DI2-	STO2/DI3+	STO1/DI3-	GND	CAN_L	CAN_H	GND	PE	GND	CAN_L	CAN_H	GND	PE
EtherCAT	PE	48V+	GND	RES	DO1+	DO_COM	AI1	AGND	BAT_PWR	GND	STO_FB-/DI1+	STO_FB+/DI1-	NC/DI2+	STO_COM/DI2-	STO2/DI3+	STO1/DI3-	TX+	RX+	RX-	TX-	PE	TX+	RX+	RX-	TX-	PE
RS485	PE	48V+	GND	RES	DO1+	DO_COM	AI1	AGND	BAT_PWR	GND	STO_FB-/DI1+	STO_FB+/DI1-	NC/DI2+	STO_COM/DI2-	STO2/DI3+	STO1/DI3-	GND	RS485+	RS485-	GND	PE	GND	RS485+	RS485-	GND	PE

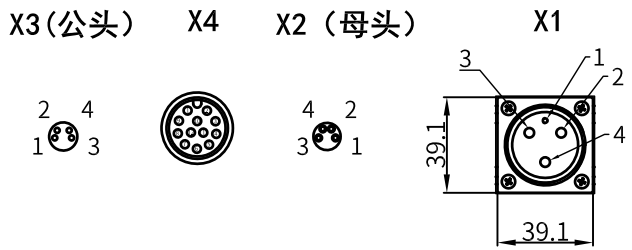

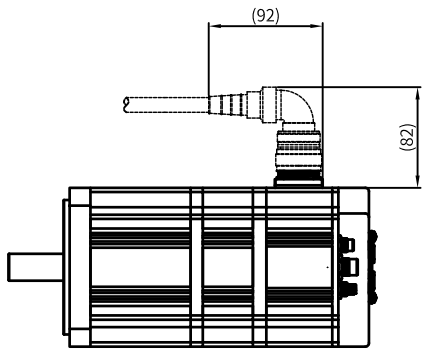

视图B
1:6

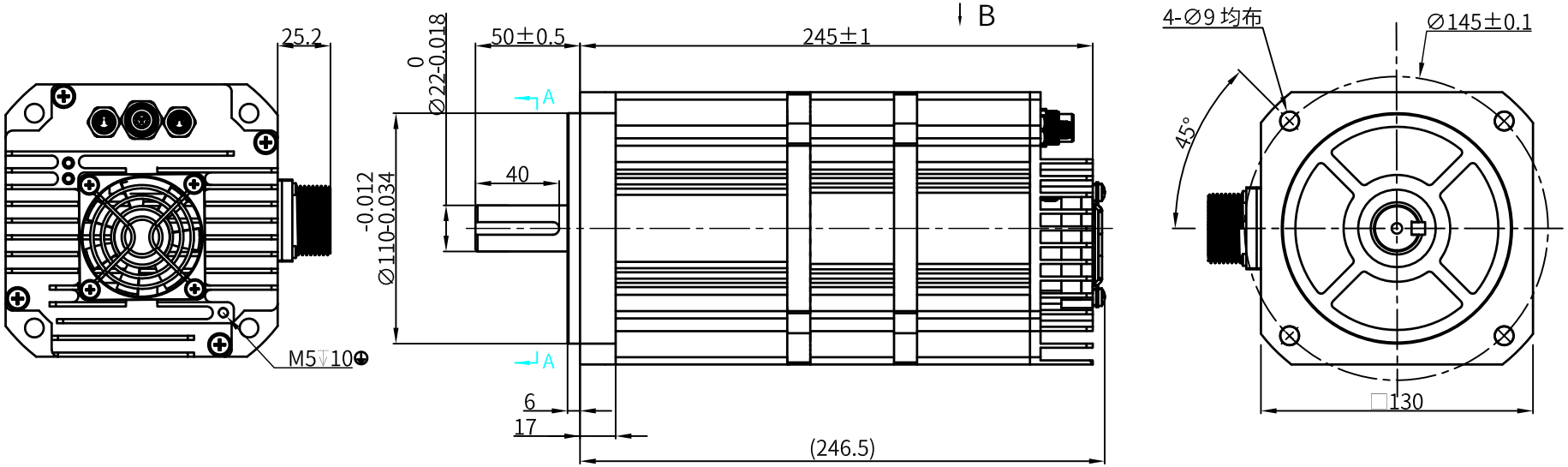

额定功率/Rated Power	1500W
额定电压/Rated Voltage	48VDC
额定电流/Rated Current	45±10% A
额定力矩/Rated Torque	4.78Nm
额定转速/Rated Speed	3000±10%rpm
峰值力矩/Peak Torque	9.54Nm
制动力矩/Break Torque	15Nm
吸引时间/Attraction Time	< 120 ms
释放时间/Release Time	< 60 ms
运行方式/Operation Mode	PP/PV/PT/CSP/Home
通信方式/Communication Mode	EtherCAT CANopen RS485
转子惯量/Rator Inertia	$12.3*10^{-4}$ Kg.m^2
重量/Weight	9.2kg

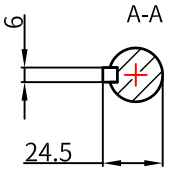

注：配6*6*25 A型平键

未注尺寸公差 DEFAULT DIMENSIONAL TOLERANCE GB/T 1804-M	未注形位公差 DEFAULT GEOMETRIC TOLERANCE GB/T 1184-K	FIRST ANGLE METHOD	NiMotion 北京立迈胜控制技术有限公司 Beijing Nimotion Control Technology Co.,Ltd.						
设计DRAWN	曹继伟	2025/5/12	图号 DWG NO.	LMS-C20-25041			型号 MODEL	PSMP1301K5-XXX-0HSB	
审核CHK'D	耿源	2025/5/12	物料编码 P/N				名称 TITLE	一体化低压伺服电机	
批准APPV'D	董春禄	2025/5/12	版本 REV	A01	图幅 SIZE	A4	比例 SCALE	1:3	共 1 张 第 1 张 SHEET 1 OF 1