www.nimotion.cn
NiMotion - Professional motion control service platform

NMWX 28 Series CANopen & RS485 Communication Integrated micro slide

Instruction Manual

Safety Instructions

Danger (May cause death or serious injury!)	
Wiring job, be sure to by professional electrical engineer according to the connection diagram installation operation.	Danger of electric shock and fire.
Before wiring , make sure that the power supply is off.	Danger of electric shock and fire.
The ground wire of the integrated motor and the input terminal of the power must be firmly installed.	Danger of electric shock and fire.
Do not bend , pull or clamp the connecting cable forcibly.	Danger of fire.
When using on the lifting device , please take measures to protect the position of the movable part.	Danger of injury.
Please set up circuit breakers and other safety devices to prevent external circuit short circuit and equipment failure can cut off the power supply in time.	Danger of electric shock and fire.
Do not use it in places with severe vibration and impact.	Danger of fire.
After the driver is powered off, the bus voltage will remain for a period of time. Do not touch the power input terminal within two minutes.	Danger of electric shock and fire.
For the power supply of the integrated motor, please use the primary and secondary reinforced insulated DC power supply.	Danger of electric shock.
Please cut off the power supply of the integrated motor during power failure, otherwise the integrated motor will start suddenly after restoring the power supply.	Danger of injury.
When the integrated motor is running, please ensure safety before releasing the holding force of the integrated motor.	Danger of injury.
Do not use the integrated motor near inflammable, explosive, corrosive environment and places easy to touch water.	Danger of electric shock and fire.
Warning (May result in injury or damage to objects!)	
The integrated motor is strictly prohibited from being impacted: If it is impacted, the integrated motor encoder may be damaged or offset with the magnet position, affecting the accuracy or operation of the motor.	Risk of equipment failure.
Do not turn the motor shaft when the integrated motor power is OFF: If the motor shaft is turned at more than 400rpm when the electromechanical power is OFF, the integrated motor may cause drive damage due to regenerative current.	Risk of equipment failure.
When using the integrated motor, do not exceed its specification value.	Danger of injury and motor fault.
Do not hold the integrated motor output shaft or cable during handling.	Danger of injury and motor fault.
Please install the protective cover on the rotating part (output shaft) of the integrated motor.	Danger of injury.
Do not stack obstacles hindering ventilation around the integrated motor to ensure heat dissipation.	Danger of motor fault.
Do not touch the integrated motor when it is running or within a short time after it stops running. Please post a warning sign in a conspicuous position.	Danger of scalding.
Please use the integrated motor according to the specified parameters.	Danger of motor fault and fire.

Please install an emergency stop device or emergency stop circuit outside the integrated motor to ensure safe shutdown in case of failure or abnormal operation.	Danger of injury.
Please do not touch the shell during insulation resistance measurement or insulation withstand voltage test.	Danger of electric shock.
When the integrated motor is abnormal, please stop running immediately and cut off the power supply to avoid fire or injury.	Danger of injury and fire.
When using, ensure that the grounding resistance of the system is less than 4Ω. When multiple integrated motors are used in parallel, the grounding resistance between the ground of each integrated motor is less than or equal to 0.1Ω. The interface of the master controller and the slave station of the integrated servo motor should be in common ground, and the grounding resistance should be less than or equal to 0.1Ω. The integrated motor shell shall be installed on the integrated motor bracket through the installation hole. The bracket shall be reliably connected to the ground, and the grounding resistance shall be less than or equal to 0.1Ω.	Danger of motor fault.
The power supply of the integrated motor needs to be connected with a capacitor above 4700uF, which is used to absorb the regenerative current generated by the external force and excessive deceleration of the motor and reduce the peak starting current of the high speed response of the large inertia load. Otherwise, it will cause serious damage of the motor.	Danger of motor fault.
⚠ Caution	
Do not disassemble or modify the integrated motor, otherwise it may cause injury. For inspection or repair, please contact Nimotion, inc.	
When the integrated motor is scrapped, please disassemble it as far as possible and treat it as industrial waste.	
Before use, please read and fully understand the "Safety Instructions" to use the integrated motor correctly.	
This product is designed and manufactured for use in general industrial equipment. Don't use it for any other purpose. We hereby state that we will not be liable for any damages caused by ignoring this advice.	

1.Summary

1.1Preface

Thank you for using the NMWX-28 series integrated micro linear stage from NiMotion! Please read this guide carefully before use!

This is a high-performance, low-power motion module independently developed by our company. High-precision linear guides and ball screws are adopted in the design. The structure contains no couplings or other intermediate connecting parts; the lead screw and the ball nut are integrated into a single unit, reducing intermediate components and assembly errors and achieving high-precision positioning. It adopts Field Oriented Control (FOC) technology and SVPWM (Space Vector Pulse Width Modulation) technology, and supports CANopen and RS485 communication bus control. Equipped with the NiMotion integrated servo stepper drive, it features a compact structure that enables downsizing of the equipment and facilitates design and selection. It can be used in a wide range of industries, for example: dispenser drives, terminal press-fitting, CCD camera focusing, pipetting and handling, positioning and deviation correction, etc.

This manual is the instruction manual for the NMWX-28 series integrated micro linear stage. It provides information on motor selection, technical specifications, terminal definitions, etc. For details on the specific functions and communication protocol of the micro linear stage, please refer to the communication manual or consult NiMotion technical support.

As we are committed to the continuous improvement of the integrated micro linear stage, the materials provided by our company are subject to change. Please refer to the latest version, which may be updated without prior notice.

1.2 About Manuals and Acquire

Unauthorized reproduction or copying of all or part of this manual is prohibited.

Product performance, specifications, and appearance may be changed due to improvements without prior notice. Thank you for your understanding.

We strive to make the contents of this manual as accurate as possible. If you find any problem, error, or omission, please contact NiMotion.

This manual is not shipped with the product. To obtain the electronic PDF file, use one of the following methods:

- Visit the NiMotion official website at http://www.nimotion.com , search for the product, go to the product details page, and download the relevant materials after logging in.
- Scan the QR code on the product to obtain product-related information.

目 录

1.Summary 3
1.1Preface 3
1.2 About Manuals and Acquire 4
2. Product Inspection and Model Description 1
2.1 Unpacking Inspection 1
2.2 Product Model Comparison 2
2.2.1 Naming Rules 2
2.2.2 Installation Dimensions 3
2.2.3 Installation Method 3
3. Specifications 5
3.1 Technical Specifications 5
3.2 Indicators 8
3.3 Terminal Definitions 9
3.3.1 Power Port 9
3.3.2 Communication Port 10
3.3.3 Digital Input/Output Port (I/O) 11
3.3.4 Communication Wiring Diagram 12
3.3.5 I/O Terminal Wiring Diagram 13
4. Cable Selection 15
5. Position Control 18
6. Alarm Functions 20
7. Routine Inspection and Maintenance 22
7.1 Inspection Items and Intervals 22
7.2 Grease Replenishment 24
Warranty 25
Warranty Period 25
Warranty Coverage 25
Important Usage Instructions 26
Version Change Record 27

2. Product Inspection and Model Description

2.1 Unpacking Inspection

When unpacking, please carefully check the items listed below:

- Is it the product you ordered: Check that the model/specification on the nameplate matches your order requirements.
- Is the product damaged: Visually inspect the appearance for damage or scratches.
- Are the screws loose: Check whether any screws are not tightened or have fallen off.
- If any of the above conditions occur, please contact us for proper resolution.

A complete and operable product package should include:

- 28 integrated micro linear stage.
- Required communication cables.
- Required communication interface components.

2.2 Product Model Comparison

2.2.1 Naming Rules

NMWX - 2834 – 485 – M – 1ZB – 6 - 1 - L100 - A

① ② ③ ④ ⑤ ⑥ ⑦ ⑧ ⑨

①	NMWX：Micro Linear Stage	②	2834：Compatible with STM2845B screw 2845：Compatible with STM2845B screw
③	Communication method： CANopen、RS485	④	Hardware function code: M - Step Servo
⑤	Shaft type of screw rod：1ZB- Trapezoidal screw rod	⑥	Diameter of the screw rod：6mm
⑦	Pitch of the screw rod：1mm		
⑧	Effective travel of the micro slide plate：15、30、50、100、150、200、250mm		
⑨	Version number：A		

Figure 1 Product Naming Rules

2.2.2 Installation Dimensions

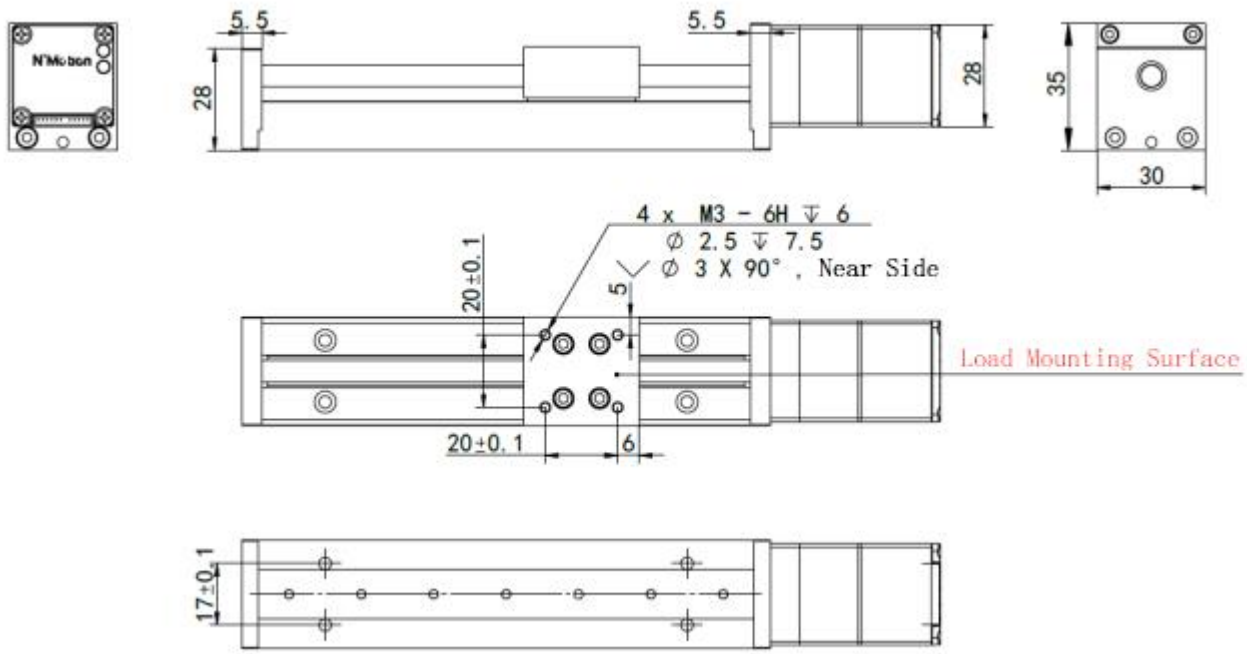

Figure 2 Overall Structure of the Product (Schematic Diagram)

Note: For specific dimensions, refer to the product engineering drawing.

2.2.3 Installation Method

Front Mounting

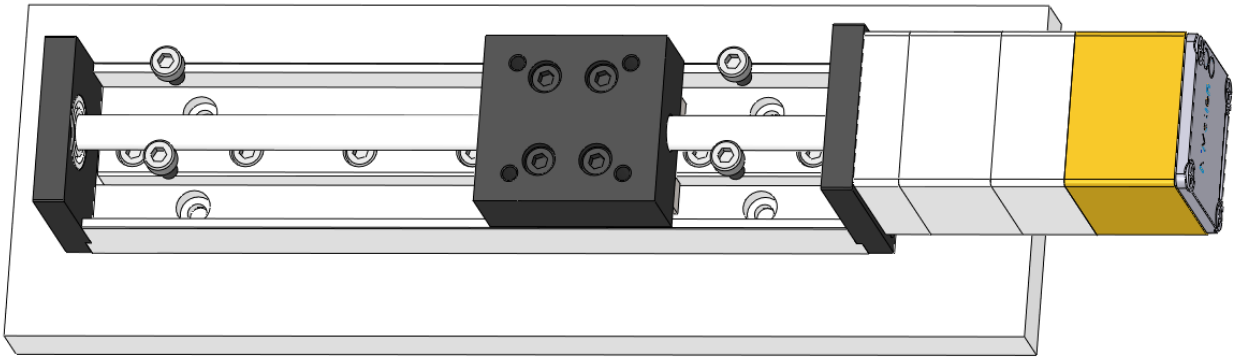

Figure 3 Front Mounting

Load Mounting

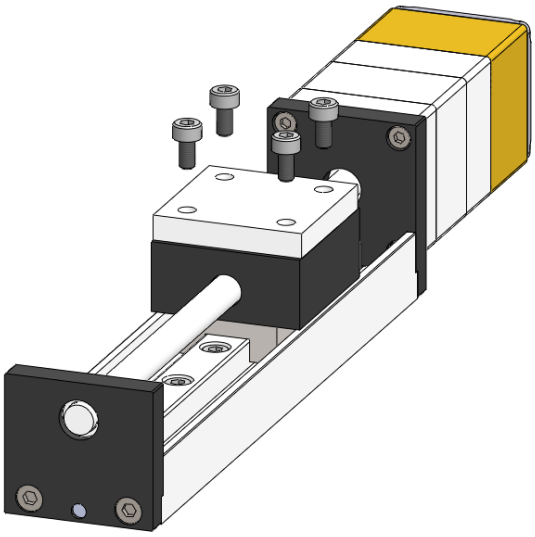

Figure 4 Load Mounting

3. Specifications

3.1 Technical Specifications

Table 1 Model Specifications

Product Model	Communication Method	Rated Current (A)	Rated Voltage (VDC)	Screw Diameter (mm)	Repeatability (mm)	Effective Stroke (mm)	Overall Length (mm)	Overall Height (mm)
NMWX-2834-L15	CANopen/RS485	1.0	24	6	±0.1	15	108	35
NMWX-2834-L30	CANopen/RS485	1.0	24	6	±0.1	30	123	35
NMWX-2834-L50	CANopen/RS485	1.0	24	6	±0.1	50	143	35
NMWX-2834-L100	CANopen/RS485	1.0	24	6	±0.1	100	193	35
NMWX-2834-L150	CANopen/RS485	1.0	24	6	±0.1	150	243	35
NMWX-2834-L200	CANopen/RS485	1.0	24	6	±0.1	200	293	35
NMWX-2834-L250	CANopen/RS485	1.0	24	6	±0.1	250	343	35
NMWX-2845-L15	CANopen/RS485	1.0	24	6	±0.1	15	120.5	35
NMWX-2845-L30	CANopen/RS485	1.0	24	6	±0.1	30	135.5	35
NMWX-2845-L50	CANopen/RS485	1.0	24	6	±0.1	50	155.5	35
NMWX-2845-L100	CANopen/RS485	1.0	24	6	±0.1	100	205.5	35
NMWX-2845-L150	CANopen/RS485	1.0	24	6	±0.1	150	255.5	35
NMWX-2845-L200	CANopen/RS485	1.0	24	6	±0.1	200	305.5	35
NMWX-2845-L250	CANopen/RS485	1.0	24	6	±0.1	250	355.5	35

Table 2 Technical Specifications

Specification	Description
Input Voltage Range	12-30VDC
Number of Motor Phases	2
Step Angle	1.8°
Insulation Class	B
Insulation Resistance	100MΩ@500VDC
Temperature Rise	80°C
Maximum Speed (mm/s)	10
Linear Accuracy	0.18/300mm
Repeatability	0.1mm
Screw Straightness	0.2mm/300m
Backlash	0.02mm
Screw Lead	1mm
Screw Diameter	6mm
Nut Material	POM, PBT, PEEK
Screw Material	303 Stainless Steel
Effective Stroke	15, 30, 50, 100, 150, 200, 250
Maximum Horizontal/Vertical Load	5/1 kg
Communication Method	CANopen or RS485 communication (optional)
Drive Method	Adopts FOC (Field Oriented Control) technology and SVPWM (Space Vector Pulse Width Modulation)
Encoder	17-bit encoder
Control Mode	CiA402 modes: PP, VM, PV, PT, HM, IP, CSP, CSV, CST
	NiMotion modes: Position mode, Velocity mode, Torque mode
DI (Digital Input)	Quantity: 3, frequency ≤ 200 kHz; supports two input levels of 5 V-30 V
DO (Digital Output)	Quantity: 2, maximum current 0.5 A, maximum voltage 30 V, maximum pulse frequency 1 MHz; Output type: MOS open-drain output, NPN Configurable functions: 1. Motor running/stopped 2. Target reached 3. Alarm output

Faults and Alarms	Overvoltage / Undervoltage / Overtemperature / Hardware fault / Stall / Overload / Overspeed / Initialization fault / Storage fault / Over-limit detection / Homing timeout / Tracking fault / Target position overflow / Trajectory planning parameter too small, etc.; Alarms are self-resetting; faults require manual reset.
Environment	Operating ambient temperature: 0°C-40°C; Operating ambient relative humidity: 10%RH-85%RH, non-condensing
	Storage ambient temperature: -40°C-85°C; Pollution level: SO2 < 0.5 ppm; H2S < 0.1 ppm
	Installation environment: free of corrosive gases, flammable materials, oil mist, etc., and free of strong vibration; Installation method: horizontal or vertical; Altitude < 1000 m

3.2 Indicators

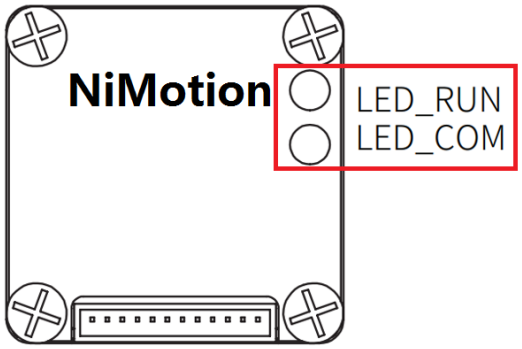

Table 3 Indicator Definitions

Meaning	Green LED (RUN)	Yellow LED (COM)
Communication normal, no alarm	Steady ON	Slow flashing (1 s blink interval)
Communication normal, with warning	Steady ON	Flashing (0.5 s blink interval)
Communication normal, with fault	Steady ON	Flashing (0.25 s blink interval)
Communication normal, hardware fault	Steady ON	Steady OFF
Communication abnormal, with warning	Flashing (0.5 s blink interval)	Flashing (0.5 s blink interval)
Communication abnormal, with fault	Flashing (0.5 s blink interval)	Flashing (0.25 s blink interval)
Abnormal power supply or serious fault	Steady OFF	Steady OFF

3.3 Terminal Definitions

3.3.1 Power Port

As shown in the figure below, when facing the connector directly, pin 12 is on the left side of the power port.

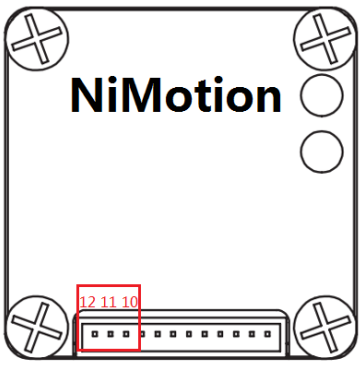

Figure 8 Power Port

Table 4 Power Port Definition

Pin	Function	Remarks
6	GND	Power ground
10		
11	VCC	12-30VDC
12		

Note: The positive and negative poles of the power cable must not be reversed; otherwise, the product may be damaged, and such damage is not covered by the manufacturer's warranty.

3.3.2 Communication Port

The CNET communication port is used for CANopen/RS485 communication. As shown in the figure below, when facing the connector directly, pin 1 is at the far right of the port.

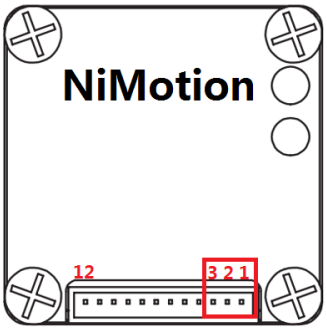

Figure 9 Communication Port

Table 5 Communication Port Definition

Pin	RS485	CAN
1	485+(A)	CAN_L
2	485- (B)	CAN_H
3	GND	GND

3.3.3 Digital Input/Output Port (I/O)

Digital input and output connection port.

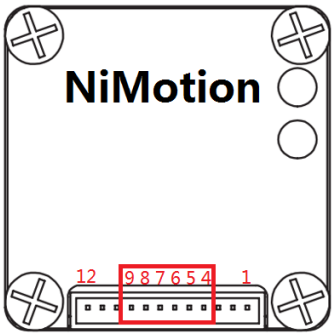

Figure 10 I/O Port

Table 6 I/O Port Definition

Pin	PIN	Function
4	DO2	Open-drain output Maximum current 100 mA Maximum voltage 30 VDC
5	DO1	
7	DI3	Logic signal 1: input 5-24 VDC Logic signal 0: input 0-2 VDC Non-isolated
8	DI2	
9	DI1	

3.3.4 Communication Wiring Diagram

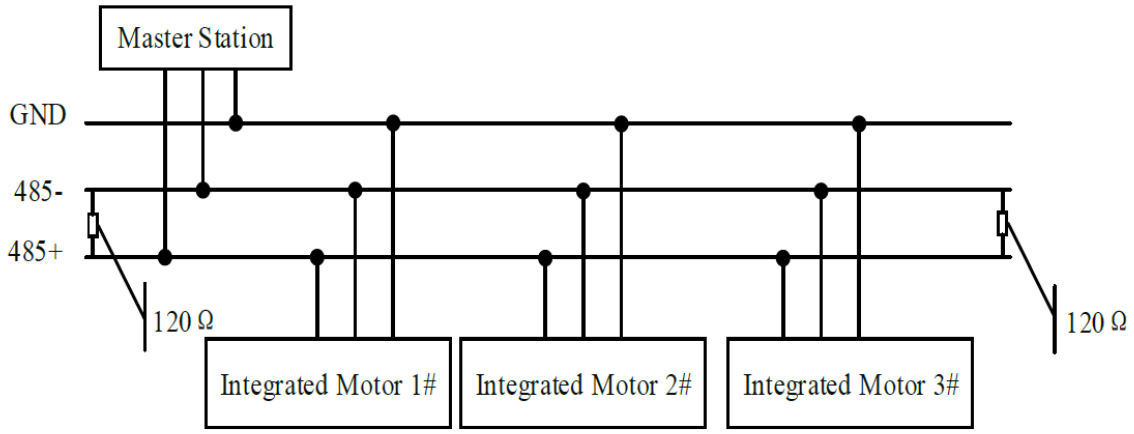

Figure 11 RS485 Communication Wiring Diagram

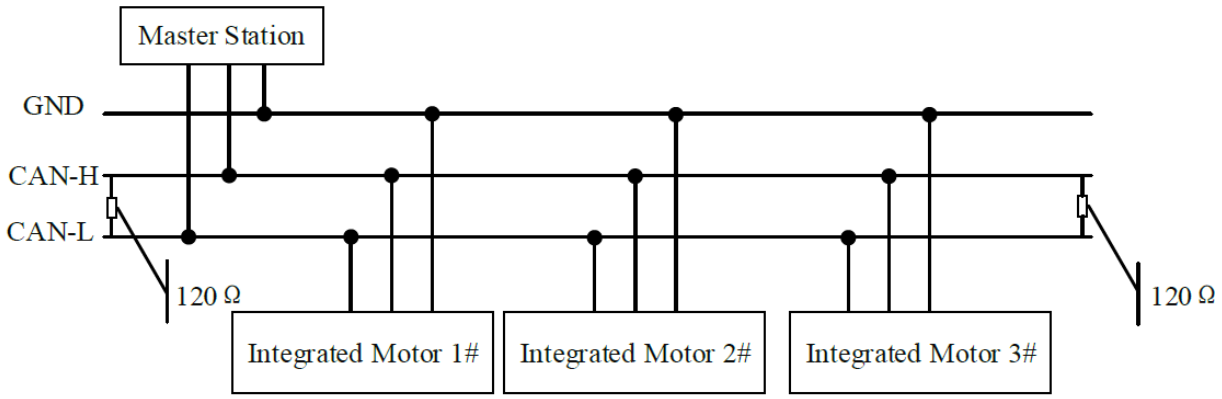

Figure 12 CANopen Communication Wiring Diagram

3.3.5 I/O Terminal Wiring Diagram

DI1, DI2, DI3 (input) connected to an NPN sensor

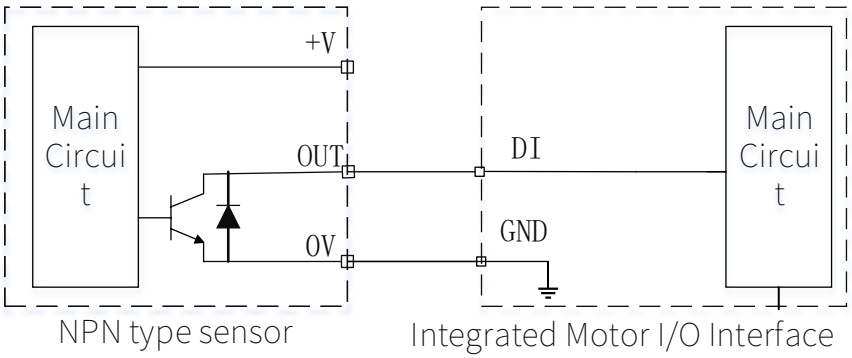

Figure 13 DI Input Port Connected to an NPN Sensor

Connect the sensor +V to the positive pole of the power supply, the sensor 0 V to the negative pole of the power supply and to the motor GND (common ground), and the sensor OUT terminal to the motor DI.

DI1, DI2, DI3 (input) connected to a switch

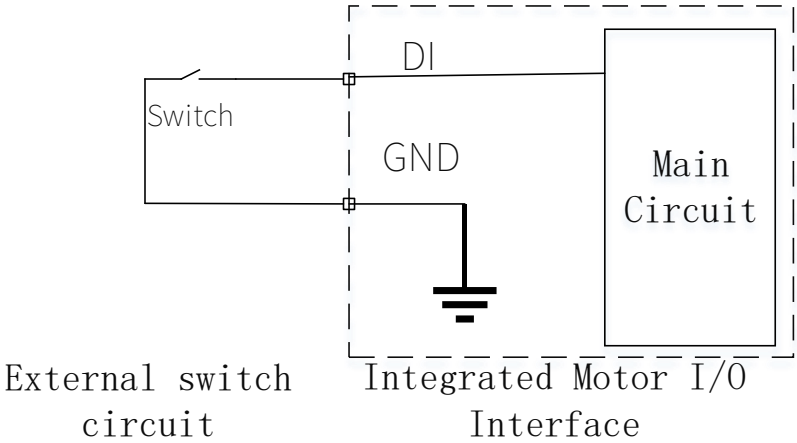

Figure 14 DI Input Port Connected to a Switch

Connect the motor DI to one end of the switch, and the other end of the switch to the motor GND.

DI1, DI2, DI3 (input) connected to pulse input

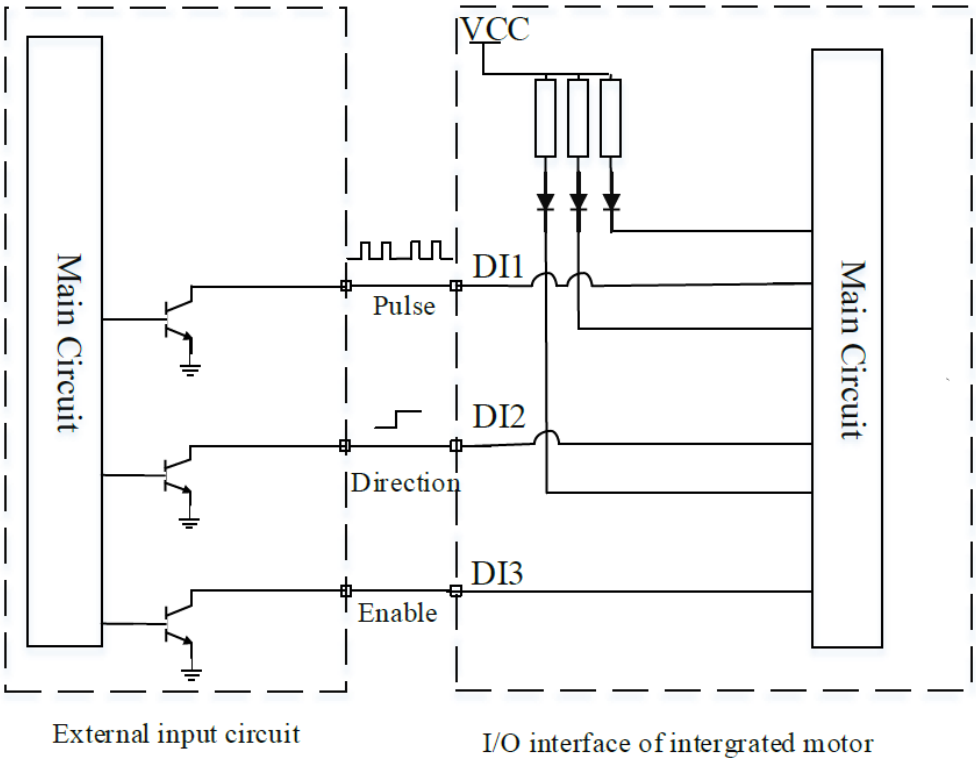

Figure 15 DI Input Port Connected to Pulse Input

DO1, DO2 (output) connected to an LED

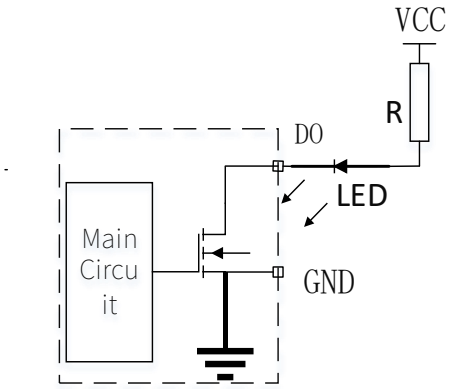

Figure 16 DO Output Port Connected to an LED Indicator

Connect the positive pole of the power supply VCC to the anode of the LED through a current-limiting resistor; connect the DO terminal of the I/O interface to the cathode of the LED, and the GND terminal of the I/O interface to the negative pole of the power supply.

4. Cable Selection

Table 7 Cable Selection Table

Cable Selection Table for the NMWX-28 Series Integrated Stepper Servo Motor	
Cable Name	Cable Wiring Definition Diagram
SCM-USBCANI-L Converter	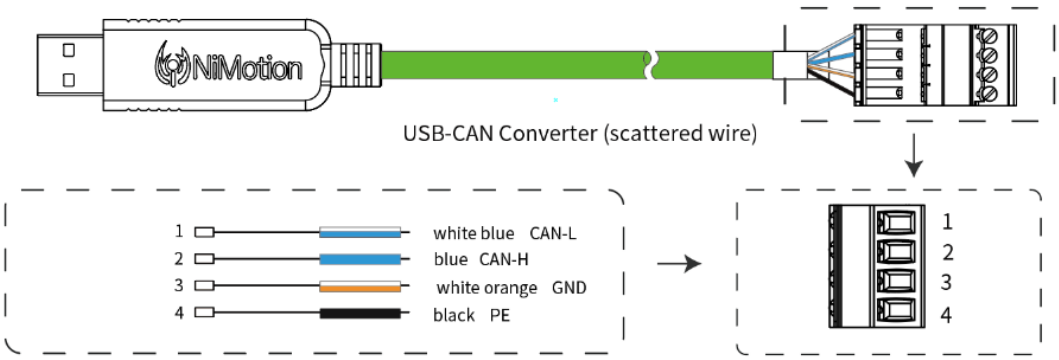
SCM-USB485A-L Converter	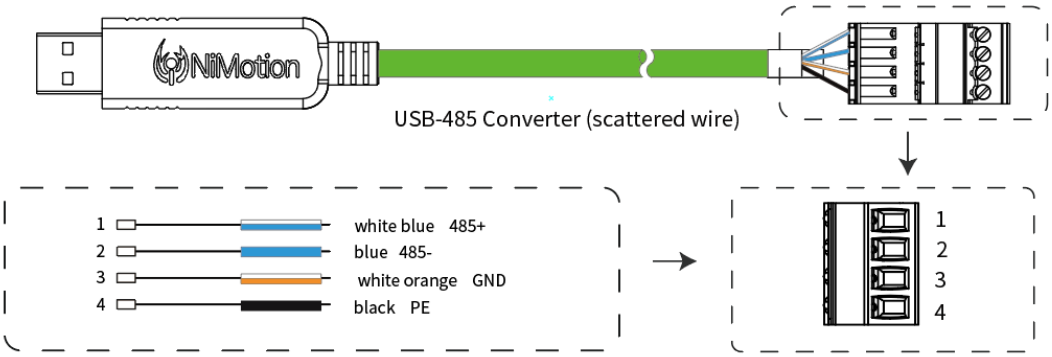

Cable Selection Table for the NMWX-28 Series Integrated Stepper Servo Motor	
Cable Name	Cable Wiring Definition Diagram
SDCX001-KZ-B T-Node Extension Cable	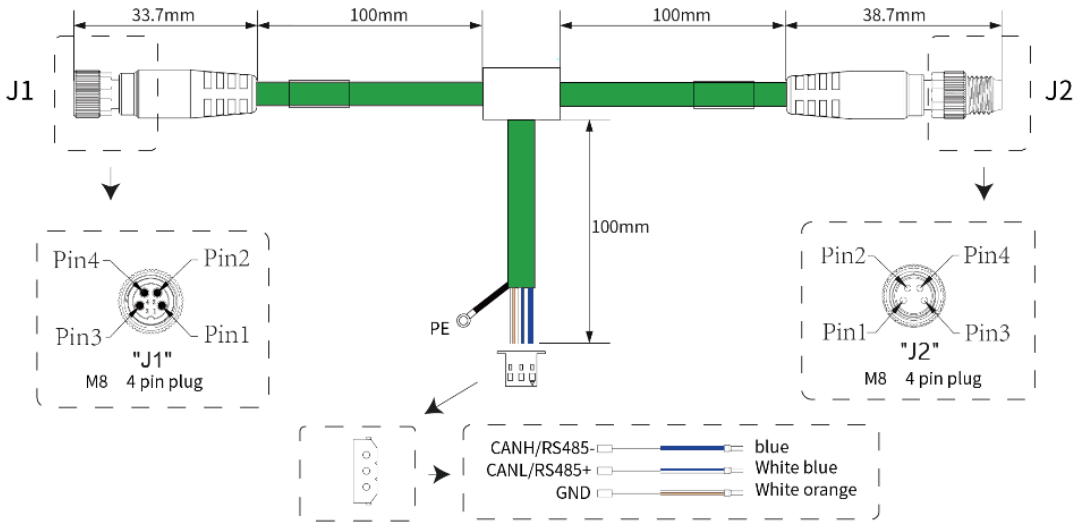
STX019 Motor Communication/Power/IO Cable	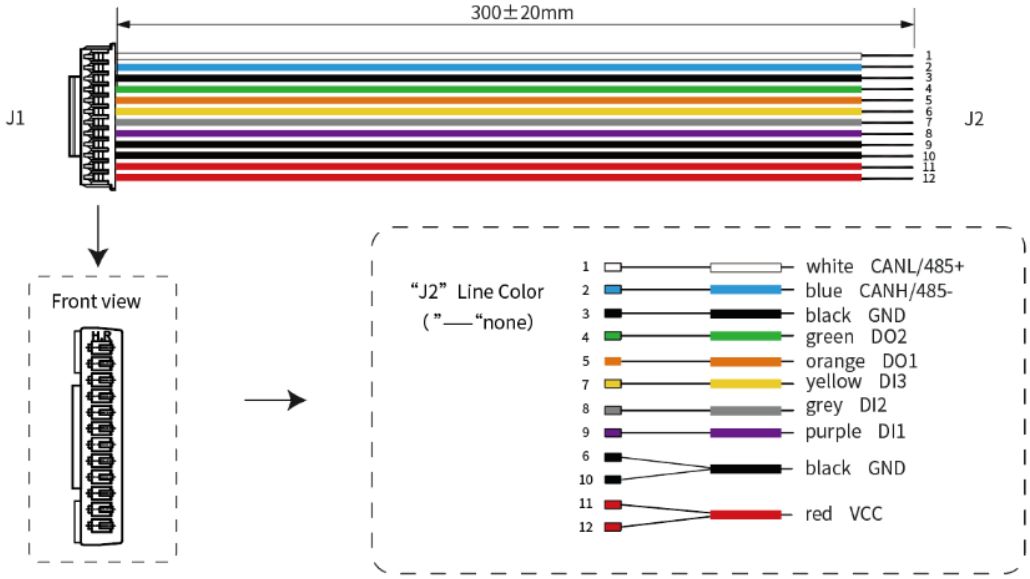

Cable Selection Table for the NMWX-28 Series Integrated Stepper Servo Motor	
Cable Name	Cable Wiring Definition Diagram
Terminating Resistor STRX001-120	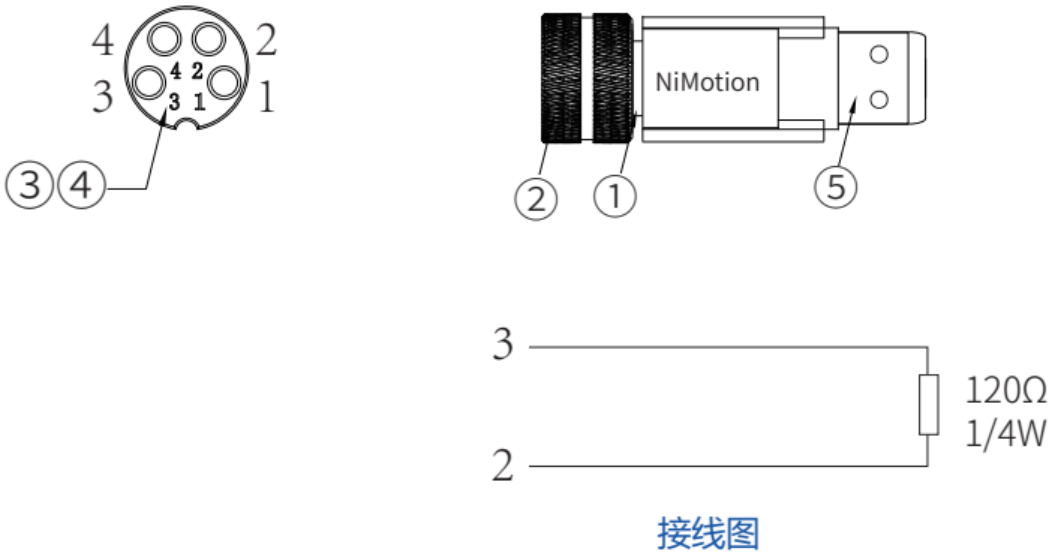

1. Communication converter: connects the integrated motor to a computer for parameter setting and commissioning;
2. Power cable: used to supply power to the integrated motor;
3. IO cable: used to connect the IO port to the control terminal;
4. Communication cable: used to connect the communication port to the commissioning terminal;
5. Terminating resistor: used at the end of the communication bus line to improve anti-interference capability.

5. Position Control

Setting the Mode

CANopen:

Write 2002h:01h = 0 (operation mode) and 6060h = 0x01 (mode of operation) to operate in Profile Position Mode

Send: 601 2B 02 20 01 00 00 00 00 (Set to CiA402 mode)

Send: 601 2F 60 60 00 01 00 00 00 (Set to Profile Position Mode)

Modbus:

Write 00B1h = 0 (operation mode) and 03C2h = 0x01 (mode of operation) to operate in Profile Position Mode

Send: 01 10 00 B1 00 01 02 00 00 (Set to CiA402 mode)

Send: 01 10 03 C2 00 01 02 00 01 (Set to Profile Position Mode)

Note: When switching modes, the motor must be in the disabled state.

Parameter Configuration

CANopen:

Write 607Ah (target position), 6083h (acceleration), 6084h (deceleration), 6081h (target velocity)

Send: 601 23 7A 60 00 10 27 00 00 (Set target position 607Ah to 10000)

Send: 601 23 81 60 00 10 27 00 00 (Set target velocity 6081h to 10000)

Send: 601 23 83 60 00 40 9C 00 00 (Set acceleration 6083h to 40000)

Send: 601 23 84 60 00 40 9C 00 00 (Set deceleration 6084h to 40000)

Modbus:

Write 03E7h (target position), 03F8h (target velocity), 03FCh (acceleration), 03FEh (deceleration)

Send: 01 10 03 E7 00 02 04 00 00 27 10 (Set target position 03E7h to 10000)

Send: 01 10 03 F8 00 02 04 00 00 27 10 (Set target velocity 03F8h to 10000)

Send: 01 10 03 FC 00 02 04 00 00 9C 40 (Set acceleration 03FCh to 40000)

Send: 01 10 03 FE 00 02 04 00 00 9C 40 (Set deceleration 03FEh to 40000)

Set the control word to enable the linear stage

CANopen:

6040h = 0x06 → 0x07 → 0x(n)F, motor enable:

Send: 601 2B 40 60 00 06 00 00 00 (Set 6040h to 0x6, motor ready)

Send: 601 2B 40 60 00 07 00 00 00 (Set 6040h to 0x7, motor disabled)

Send: 601 2B 40 60 00 0F 00 00 00 (Set 6040h to 0xF, motor enabled)

Modbus:

0380h = 0x06 → 0x07 → 0x(n)F, motor enable:

Send: 01 10 03 80 00 01 02 00 06 (Set 0380h to 0x6, motor ready)

Send: 01 10 03 80 00 01 02 00 07 (Set 0380h to 0x7, motor disabled)

Send: 01 10 03 80 00 01 02 00 0F (Set 0380h to 0xF, motor enabled)

Trigger Motion (after enabling)

CANopen:

6040h = 0x(n)F → 0x(n+1)F, motor runs:

Send: 601 2B 40 60 00 1F 00 00 00 (Set 6040h to 0x1F, absolute position motion, not updated immediately)

Send: 601 2B 40 60 00 3F 00 00 00 (Set 6040h to 0x3F, absolute position motion, updated immediately)

Send: 601 2B 40 60 00 5F 00 00 00 (Set 6040h to 0x5F, relative position motion, not updated immediately)

Send: 601 2B 40 60 00 7F 00 00 00 (Set 6040h to 0x7F, relative position motion, updated immediately)

Modbus:

0380h = 0x(n)F → 0x(n+1)F, motor runs:

Send: 01 10 03 80 00 01 02 00 1F (Set 0380h to 0x1F, absolute position motion, not updated immediately)

Send: 01 10 03 80 00 01 02 00 3F (Set 0380h to 0x3F, absolute position motion, updated immediately)

Send: 01 10 03 80 00 01 02 00 5F (Set 0380h to 0x5F, relative position motion, not updated immediately)

Send: 01 10 03 80 00 01 02 00 7F (Set 0380h to 0x7F, relative position motion, updated immediately)

The different command types are shown in the table below:

Table 8

6040h (0380h) bit6	6040h (0380h) bit5	6040h (0380h) Change	Description
0	0	0x0F0x1F→	Absolute position, not updated immediately
0	1	0x2F0x3F→	Absolute position, updated immediately
1	0	0x4F0x5F→	Relative position, not updated immediately
1	1	0x6F0x7F→	Relative position, updated immediately

6. Alarm Functions

Table 9 Alarm Function List

Alarm Code	Alarm Description	Default Alarm Type	Auto Reset
0x2300	Motor Overcurrent	Fault	No
0x4012311	Motor Overload	Warning	Yes
0x3002312	Motor Stall	Pause and Lock Shaft	No
0x13210	Power Supply Overvoltage	Fault	Yes
0x1013220	Power Supply Undervoltage	Fault	Yes
0x14210	Overtemperature Alarm	Fault	Yes
0x14220	Undertemperature Alarm	Fault	Yes
0x5080	Driver Fault*	Fault	No
0x5540	Flash Initialization Fault	Fault	No
0x5541	Flash Initialization Fault	Fault	No
0x4005542	Flash Verification Error Warning	Warning	No
0x5543	No Parameters in Flash User Area	Fault	No
0x4005544	Power-down Position Storage Abnormality	Warning	No
0x4005545	Power-down Data Not Saved	Warning	No
0x6000	Hardware Initialization Fault	Fault	No
0x16320	Parameter Setting Error	Fault	Yes
0x6321	Registration Fault	Fault	No
0x7305	Z Pulse Fault	Fault	No
0x7306	Encoder Fault	Fault	No
0x4017307	Encoder Warning	Warning	Yes
0x4017308	Encoder Calibration Failed	Warning	Yes
0x17310	Overspeed	Fault	Yes
0x3017501	Communication Fault	Warning	Yes
0x4017502	Illegal Address	Warning	Yes
0x4017503	Illegal Data Value	Warning	Yes
0x4017505	Acknowledgment in Communication	Warning	Yes
0x4017506	Slave Device Busy in Communication	Warning	Yes
0x401750C	Requested Data Larger Than Mapped Data	Warning	Yes
0x401750D	Number of Requested Data Items Not Equal	Warning	Yes

Alarm Code	Alarm Description	Default Alarm Type	Auto Reset
	to Number of Mapped Data Items		
0x401750E	Message Node Address Error	Warning	Yes
0x4018311	Torque Limit Protection	Warning	Yes
0x8610	Homing Timeout	Fault	No
0x8611	Position Deviation Exceeded	Fault	No
0x3018613	Software Limit Error	Pause and Lock Shaft	No
0x3018614	Limit Switch Error	Pause and Lock Shaft	No
0x4018615	Trajectory Planning Calculation Error	Warning	Yes
0x18616	Target Position Overflow	Fault	No
0x5018617	Trajectory Planning Parameter Too Small	Ignore	Yes
0xFF01	Motor Parameter Identification Fault	Fault	No
0x0401FF02	Parameter Saving Fault	Warning	Yes
Note: For more details on alarms and faults, please refer to the corresponding communication manual.			

7. Routine Inspection and Maintenance

7.1 Inspection Items and Intervals

If the transmission system runs 8 hours per day, arrange the maintenance intervals according to the table below. If the equipment operates continuously or is used frequently, the maintenance interval should be shortened appropriately based on the actual operating conditions.

Maintenance Interval	External Inspection	External Cleaning	Internal Inspection
At initial start-up	○	○	-
After 1 week of operation	○	○	○
Monthly thereafter	○	○	○

External Inspection

Item to Inspect	What to Check	Action
Transmission Device	• Whether the screws mounting the transmission device are loose. • Whether the screws mounting the load are loose.	Tighten the screws.
Cables, Connectors	• Whether the cables are damaged or under stress. • Whether the connections to the motor, driver, etc. are loose.	• Replace the cable. • Reconnect the connector.
Operating Condition	Whether abnormal noise or vibration occurs at the bearings, etc.	Check the load mounting condition and the operating speed.

External Cleaning

Keep the outer surface of the product clean at all times.

① Wipe off dirt with a soft cloth.

② Do not blow with compressed air; otherwise, dust may enter through gaps and cause an accident.

③ If very dirty, wipe with a soft cloth dampened with a neutral detergent.

④ Do not use petroleum-based solvents; otherwise, the painted surface may be damaged.

Internal Inspection

Visually check the items in the table. Even if the grease has discolored, if the sliding surface is still glossy, the lubrication condition is good. For the grease replenishment method, see "7.2 Grease Replenishment".

Item to Inspect	What to Check	Action
Ball Screw Shaft	Whether dust or other foreign matter is adhering.	Remove the foreign matter.
	Whether the grease has lost its gloss or the amount has decreased.	Wipe the ball screw clean with a soft cloth, then apply grease to the ball screw groove.
Linear Guide	Whether dust or other foreign matter is adhering.	Remove the foreign matter.
	Whether the grease has lost its gloss or the amount has decreased.	Wipe the grooves on both sides of the linear guide clean with a soft cloth, then apply grease (to the guide groove).

7.2 Grease Replenishment

Wipe off the old grease or dirt with a soft cloth, then apply new grease to the lead screw.

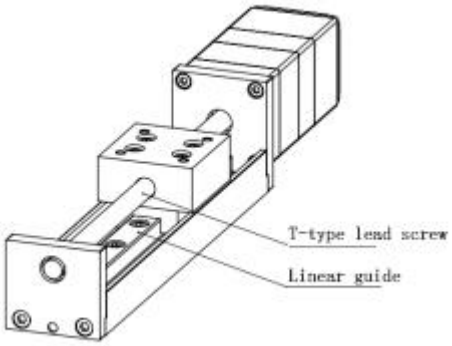

Use AFC grease.

Warranty

Warranty Period

● The product quality warranty period is 1 year after purchase. However, for motors with a brake, the warranty is subject to the number of acceleration/deceleration cycles of the shaft not exceeding its service life. (Within the permissible angular acceleration/deceleration, the acceleration/deceleration life is 5 million cycles, i.e., the number of acceleration/deceleration cycles before the brake backlash changes sharply.)

Warranty Coverage

● If a fault is confirmed within the warranty period while the product is used under normal conditions in strict accordance with the requirements of this manual, free repair service will be provided.

● Cases not covered by free repair within the warranty period:

① Damage caused by improper use, or by inappropriate repair or modification;

② Damage caused by dropping, impact, or other transportation factors after delivery;

③ Damage caused by use beyond the design specifications of the equipment;

④ Damage caused by fire, earthquake, lightning, windstorm, chloride corrosion, abnormal voltage, or other natural disasters;

⑤ Damage caused by the intrusion of water, oil, metal, or other foreign objects;

⑥ Damage to parts with a defined mechanical service life caused by exceeding their respective service life.

● The warranty covers only the main body of the purchased product. Any consequential damage arising from a failure of the product itself is not covered by our repair or compensation obligations.

Important Usage Instructions

- This product is developed, designed and manufactured in accordance with standards applicable to general industrial applications. It has not been developed or tested in compliance with technical specifications for equipment and systems in special fields involving personal safety, medical treatment, national defense, military industry, etc.
- Installation, commissioning, wiring, operation, maintenance and inspection of this product must be performed by qualified personnel with relevant professional knowledge and skills.
- The tightening torque of fasteners for product installation shall be set properly according to the strength grade of screws and material of the mounting surface to prevent loosening or breakage.
- If a failure of this product integrated into equipment may cause major accidents or losses, special safety design and corresponding safety devices shall be configured before installation.
- If you plan to use this product in special applications such as nuclear power control equipment, aerospace equipment, medical equipment, high-purity equipment or other safety-related devices, you must confirm pre-sales technical details with our company fully.
- This product has passed quality control according to standard procedures to ensure stable operation. However, it may still malfunction due to unexpected external factors (such as noise interference, electrostatic shock, power fluctuation, circuit abnormality or sudden component failure). Users must implement fault protection design and ensure that the operating environment and procedures comply with safety regulations.
- If the motor shaft operates without electrical grounding, the motor bearings may suffer from electric corrosion due to the product structure and installation environment, which may lead to increased bearing noise.
- If the product is used in an environment with high concentrations of sulfur or sulfide gases (such as H_2S, SO_2, NO_2, Cl_2, etc.), chip resistor open circuits or poor contact may occur due to sulfuration. Please take corresponding measures during the system design stage.
- The input voltage of this product must strictly comply with the rated parameters. If the input voltage significantly exceeds the rated range, it will cause irreversible damage to internal core components, with safety risks such as smoking and fire. Please inspect and confirm the input voltage before use.

Version Change Record

Version	Brief Description of Revision	Revision Date
A	Created	2026-9-9

Email：nimotion-al@nimotion.com

Beijing NiMotion Control Technology Co.,Ltd.